2002-08 BRAKES

Brakes - Repair Instructions - Cooper

BRAKES TESTING AND BLEEDING

34 00 ... GENERAL INFORMATION

The brake system is one of the most important safety systems on any motor vehicle. It is therefore essential to act with utmost care when working on the brake system and to follow the instructions below.

General:

- Ensure cleanliness and only use rags which do not lose lint.
- Wash away or vacuum up brake dust, do not clear it away using compressed air. This dust is a health hazard.
- Ensure that no oils or grease enter the brake system: these substances would cause complete failure of the entire brake system.
- When cleaning brake components with brake cleaner, do not allow brake cleaner to get into the brake system.
- Even the most minute traces of brake cleaner must be avoided.

Brake Fluid:

- Replace brake fluid at least every two years.
- Never re-use drained brake fluid.
- Always use BMW-approved brake fluid. See **MINI OPERATING FLUIDS** .
- Always dispose of brake fluid in approved receptacles.
- Do not allow brake fluid to drain into drain pipes, into the outside environment or into unsuitable facilities. This would create the risk of groundwater contamination since brake fluid is classed as a fluid that is hazardous to water.
- Do not allow brake fluid to come into contact with paintwork as this will destroy the paint.
- Brake fluid must not be allowed to remain on bare skin too long in order to avoid skin problems. Wash skin coated with brake fluid with water and soap.
- If brake fluid makes contact with eyes, immediately flush with large quantity of clean water and visit eye doctor.

Wheel Brakes:

- Brake linings:

  Brake linings must be replaced when the warning threshold value of the brake lining wear indicator is reached.

Refer to **BRAKES - TECHNICAL DATA - COOPER (1.6L) R50/W10** .

Brake linings must always be replaced on both sides of any axle.

The friction surfaces of the brake linings must not come into contact with oils or greases. The brake linings must be replaced if they are fouled by such substances.

In the case of rotation-dependent brake linings, make sure the arrow marking points in the direction of rotation of the brake disk for when the vehicle is moving forward. Brake linings with left/right markings must be fitted on the relevant side of the vehicle.

One-sided angled areas on the brake linings must be located on the disk contact side of the brake caliper for when the vehicle is moving forward.

- Brake discs:

  Brake disks must not be scored or cracked. Furthermore, minimum brake disk thickness, disk runout, parallelism and surface roughness of the friction surfaces must not exceed or drop below the permitted values.

  Refer to **BRAKES - TECHNICAL DATA - COOPER (1.6L) R50/W1** .

  Always strip preservative off new parts before installation. With the rear brake discs, also strip preservative off brake drum on parking brake.

- Brake drums:

  Brake drums must not be scored or cracked. Furthermore, the maximum drum inside diameter, radial runout and surface roughness of the friction surfaces must not exceed or drop below the permitted values.

  Refer to **BRAKES - TECHNICAL DATA - COOPER (1.6L) R50/W1** .

  Always strip preservative off new parts before installation.

- Brake calipers:

  Only approved pastes on the basis of glycine must be used for repairs on brake calipers.

  All moving parts on the brake caliper must move freely: note grease specifications.

  Use only BMW-approved lubricants to grease caliper guides.

Brake Lines, Brake Hoses:

- Brake lines and brake hoses must be correctly routed and must not abut with body or components in a way which would cause chafing.

- To prevent damage, release and tighten brake line couplings with a special brake line wrench only.
- The system must be bled each time any brake lines have been detached.
- All connection points must be checked for leaks.
- Only tighten down brake hoses on the front axle when wheels are in straight-ahead position.
- Close open connections on brake lines and individual components to prevent dirt from entering the brake system.
- Observe tightening torques when tightening down brake line screw connections.

Tightening torque, (14 N.m.).

Wheel-Slip Control System:

The slip control system is basically maintenance-free.

However, be sure to adhere to the following:

- When carrying out welding work with electric welding equipment, be sure to disconnect the plug from the electronic control unit (ignition turned off).
- During painting work, the control unit may be subjected for brief periods to loads of max. 95° C and for long periods (approx. 2 hours) to loads of max. 85° C.
- Tighten down the battery terminals completely.
- The brake lines on the hydraulic unit must not be mixed up; if necessary, mark them before they are removed and after completing repairs perform the mix-up check with the DIS Tester.

34 00 009 CHECKING BRAKES ON TEST STAND

Necessary Preliminary Tasks:

- Check tires for damage.
- Check tire treads.
- Check tire pressure.

IMPORTANT: The corresponding system must be deactivated on vehicles equipped with ASC+T or DSC. The ASC+T or DSC telltale and warning light must light up in the instrument cluster!

The brakes must be at normal operating temperature. To do so, gently warm up the brake disks and brake drums while dry by braking the vehicle several times.

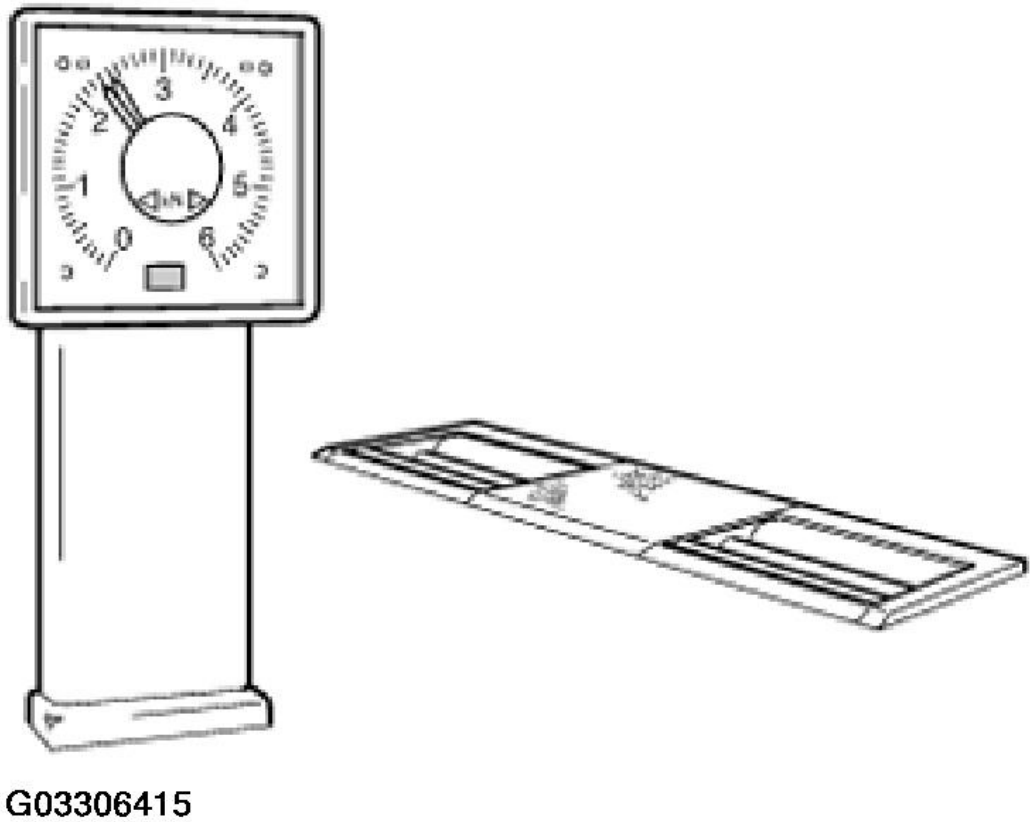

Fig. 1: Identifying Testing Stand For Checking Brakes
Courtesy of BMW OF NORTH AMERICA, INC.

IMPORTANT: Only brake test stands (analyzers) with test speeds of <= 5 km/h may be used. You must follow without fail the guidelines contained in the operating instructions of the relevant test stand manufacturer. Failure to do so may result in damage to the vehicle and the system and also personal injury.

34 00 010 CHECKING THICKNESS OF BRAKE LINING

NOTE: For Special Tool identification, see BRAKES - SPECIAL TOOLS - COOPER (1.6L) R50/W10 .

Special Tools Required:

- 34 1 260

NOTE: **The thickness of the outer brake pads can be determined without removing the road wheels. If necessary, move car until inspection opening for brake pad wear indicator (brake pad) can be seen through rim.**

Insert special tool 34 1 260 through rim into recess for brake pad wear indicator.

Fit special tool on brake pad, slide ring (1) in direction of arrow towards well and read off measured value.

In this case, a brake pad thickness of 6 mm is measured.

NOTE:

1. **Brake disk.**
2. **Brake lining.**

Safe limit for lining wear on front brake, refer to BRAKES - TECHNICAL DATA - COOPER (1.6L) R50/W1 . Safe limit for lining wear on rear brake, refer to BRAKES - TECHNICAL DATA - COOPER (1.6L) R50/W1 .

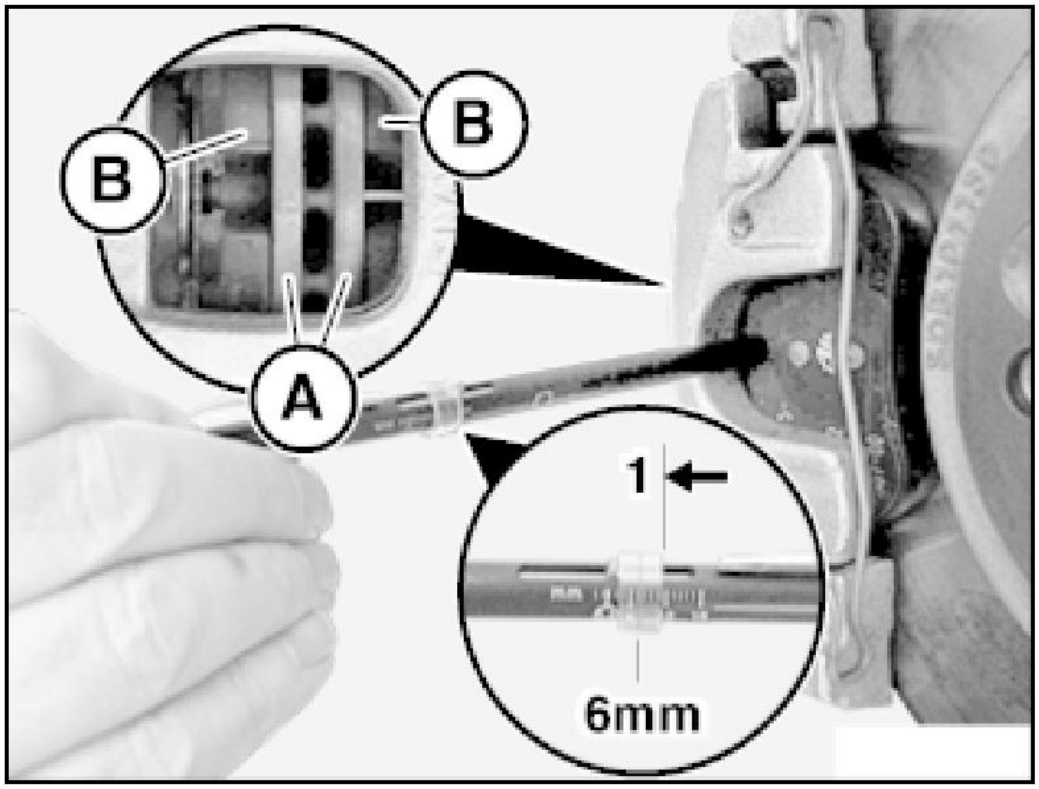

G03306416

Fig. 2: Measuring Brake Pad Thickness
Courtesy of BMW OF NORTH AMERICA, INC.

34 00 017 CHECKING BRAKE BOOSTER (LOW-PRESSURE TEST)

NOTE: **For Special Tool identification, see BRAKES - SPECIAL TOOLS - COOPER (1.6L) R50/W10 .**

Special Tools Required:

- 34 3 100

- Release clamp and detach vacuum hose. Connect vacuum tester 34 3 100 between connection and vacuum hose at non-return valve.
- Start engine.
- Check whether a vacuum forms.
- Switch off engine.
- Depress brake pedal to set a maximum value of 0.8 bar and wait until the value stabilizes.
- When the brake pedal is not depressed, the vacuum may drop by a maximum of 0.06 bar within a test period of 1 minute.

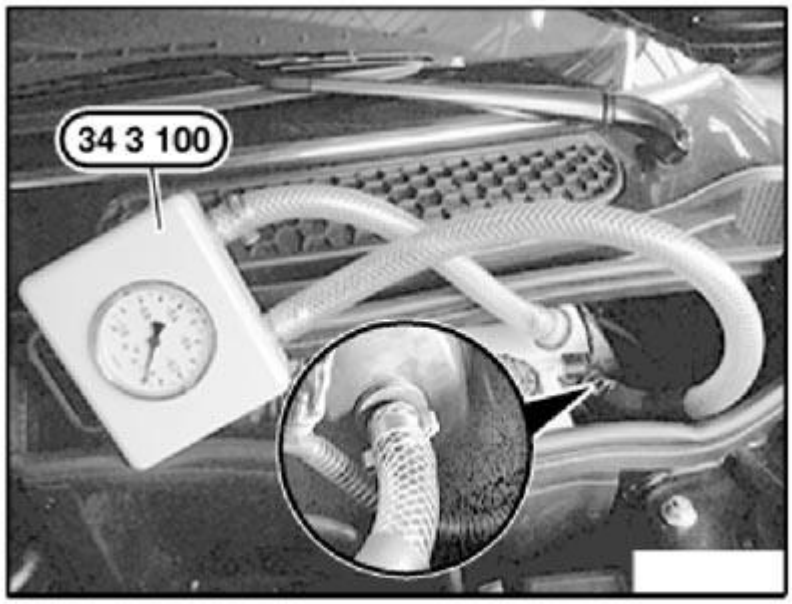

G03306417

Fig. 3: View Of Vacuum Tester
Courtesy of BMW OF NORTH AMERICA, INC.

If the specified values are not reached:

- Check line connections for leaks.
- Replace non-return valve.
- Check that seals between brake booster and brake master cylinder (sealing ring) are in perfect condition and that seal seating is correct.
- Replace the brake booster if the specified values are still not reached after repeating the test procedure.

34 00 048 BLEEDING BRAKE SYSTEM WITH ABS/ASC+T

NOTE: Read and comply with General Information. Refer to 34 00 ... GENERAL INFORMATION for the relevant bleeder unit. Charging pressure should not exceed 2 bar.

Connect bleeder unit to expansion tank and switch on.

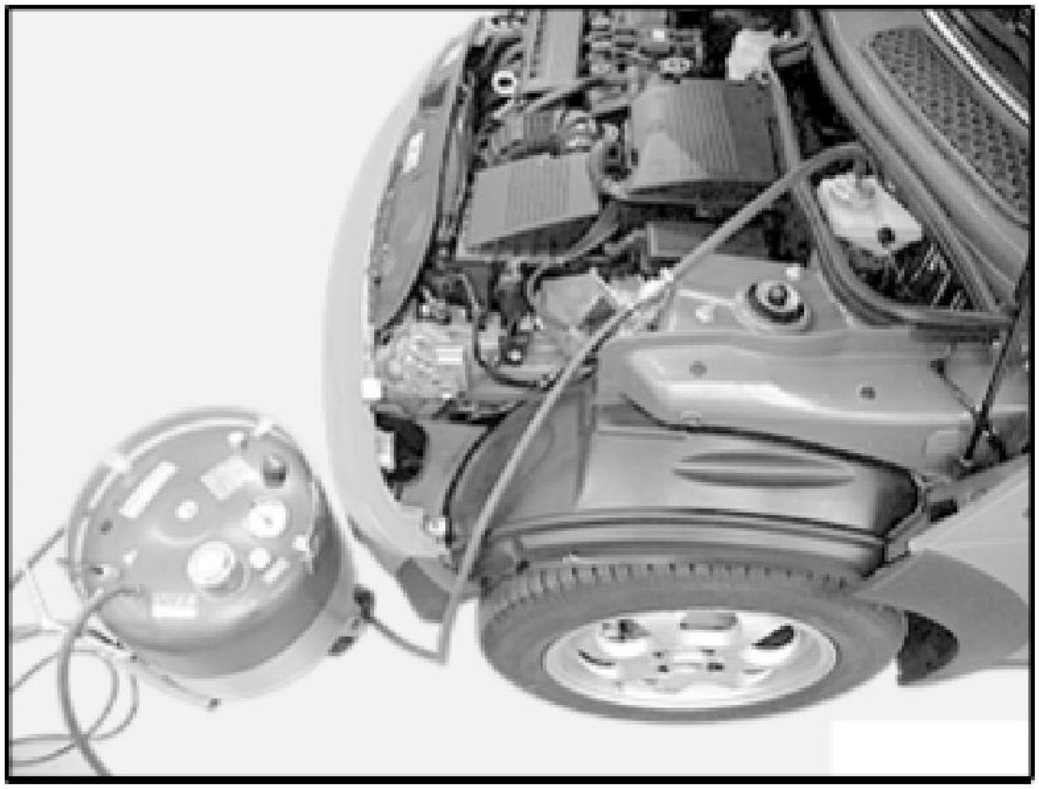

G03306418

Fig. 4: Connecting Bleeder Unit To Expansion Tank

Courtesy of BMW OF NORTH AMERICA, INC.

Bleeding Rear Axle Brake Circuit:

Connect bleeder hose and collecting container to bleeder valve at rear right wheel brake.

Open bleeder valve and flush until clear brake fluid emerges without bubbles.

Close bleed valve.

Follow the same procedure for rear left wheel brake.

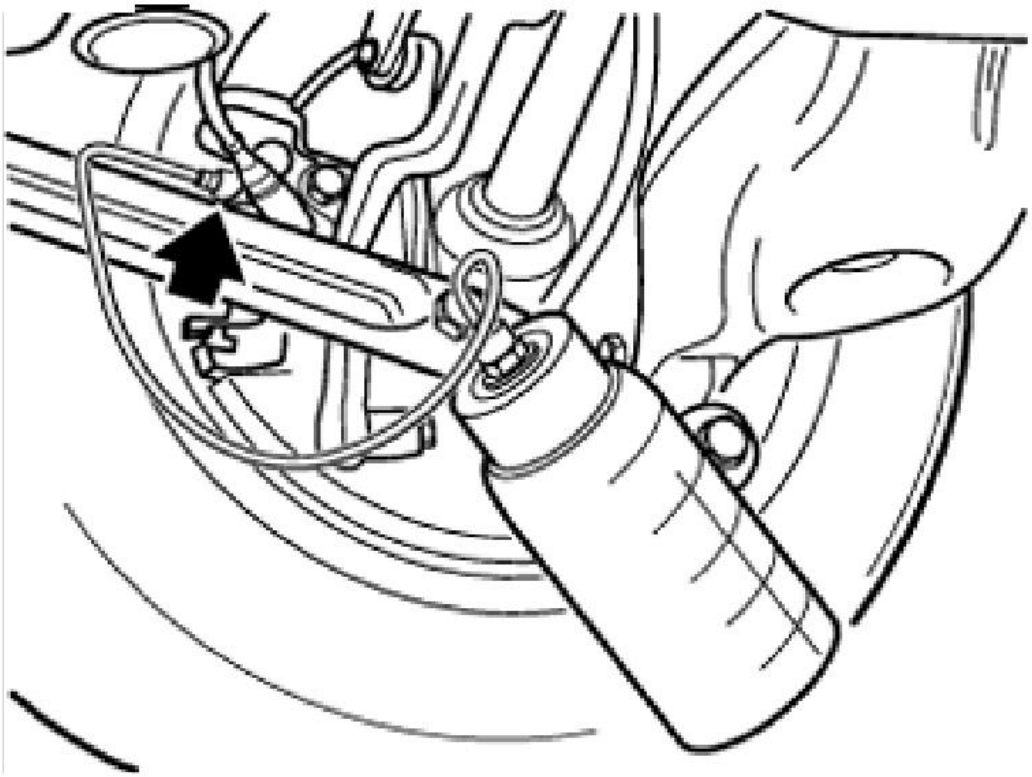

Fig. 5: View Of Bleeder Hose And Collecting Container (Rear Wheel)
Courtesy of BMW OF NORTH AMERICA, INC.

Bleed Front-Axle Brake Circuit.

Connect bleeder hose and collecting container to bleeder valve at front right wheel brake.

Close bleeder valve.

Fully depress brake pedal at least twelve times. Brake fluid must emerge clear and free of bubbles.

Hold brake pedal in fully depressed position.

Close bleed valve.

Release brake pedal.

Follow the same procedure for front left wheel brake.

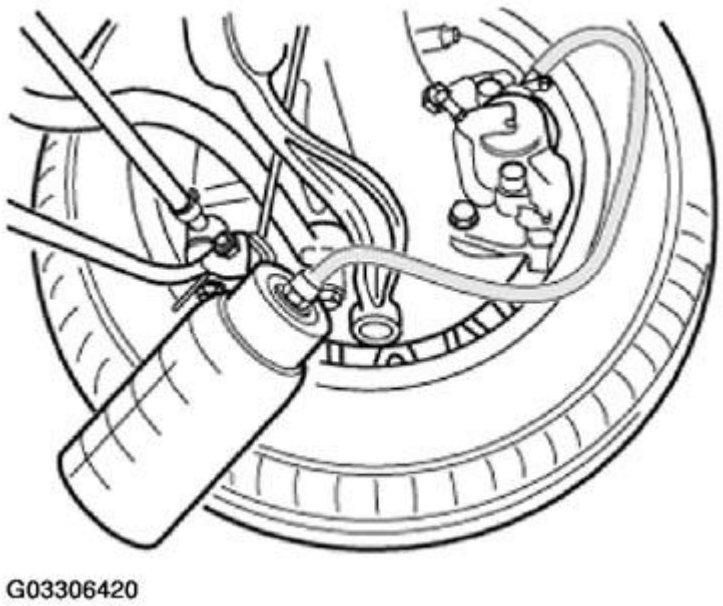

Fig. 6: View Of Bleeder Hose And Collecting Container (Front Wheel)
Courtesy of BMW OF NORTH AMERICA, INC.

Switch off bleeder unit and detach from expansion tank.

Check brake fluid level.

Close expansion tank.

NOTE: Take care of rubber gasket (1) in lid.

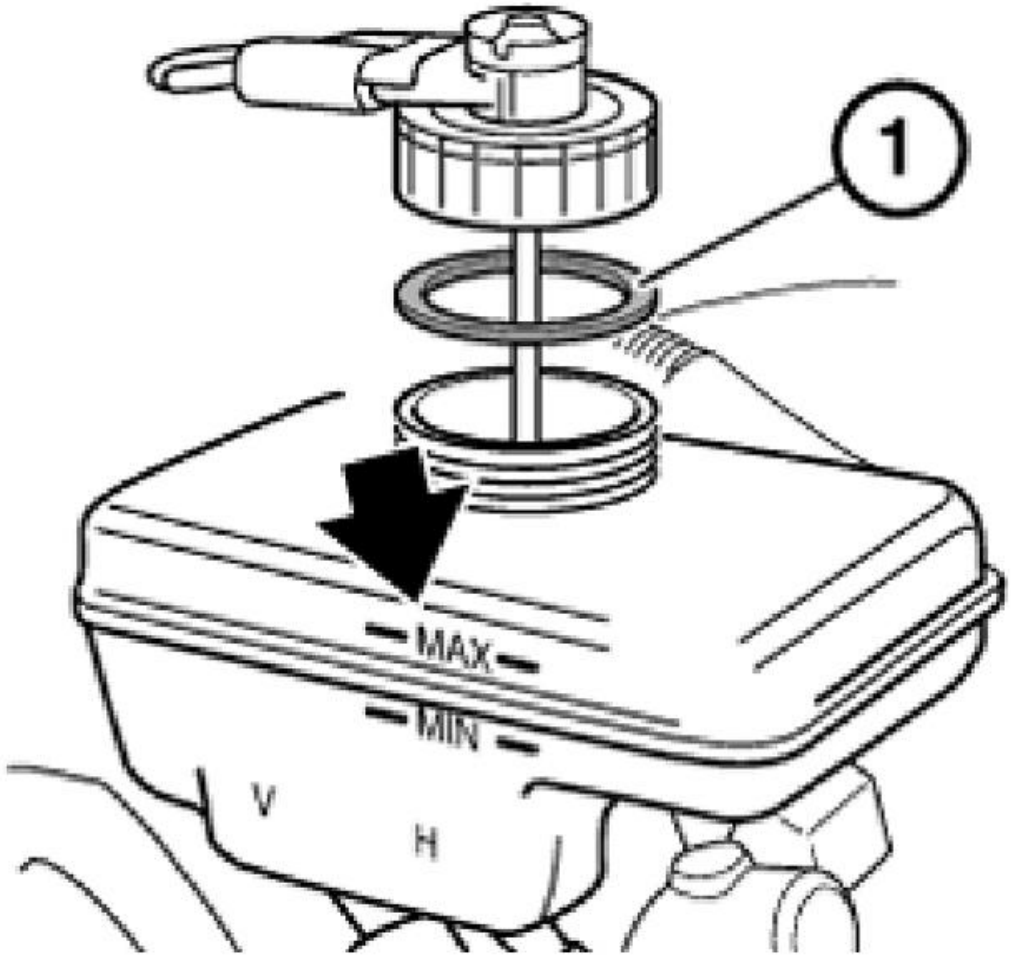

G03306421

Fig. 7: Identifying Expansion Tank Rubber Gasket
Courtesy of BMW OF NORTH AMERICA, INC.

34 00 050 BLEEDING BRAKE SYSTEM WITH DSC

NOTE: **Read and comply with General Information. Refer to 34 00 ... GENERAL INFORMATION. When replacing or repairing, observe the filling and bleeding instructions for the following parts:**

1. **Tandem brake master cylinder.**
2. **DSC hydraulic unit.**

3. **Components/connecting lines which are fitted between these assemblies.**

(Brake fluid changer connected to max. 2 bar filling pressure). After completing work: Carry out final check with DIS under menu item "Service functions". Contrary to the instructions in the DIS, the bleeding routine must be restarted on each wheel. A second person is needed to help carry out this work.

Connect DIS.

Call up service function "Bleeding ABS/DSC Hydraulics".

Connect brake fluid changer to expansion tank and switch on.

NOTE: **Check relevant operating instructions for each device. Charging pressure should not exceed 2 bar.**

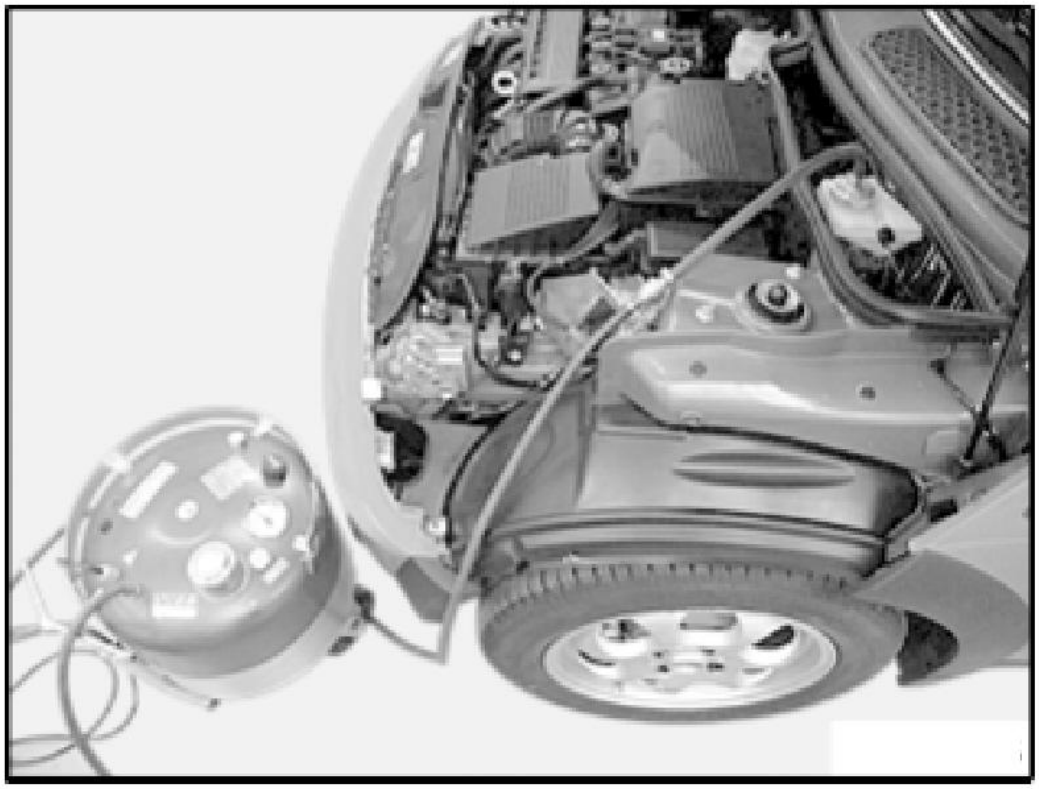

G03306422

Fig. 8: Connecting Brake Fluid Changer To Expansion Tank

Courtesy of BMW OF NORTH AMERICA, INC.

Flushing Brake System Completely:

Connect bleeder hose with collecting tray to bleeder valve on rear right brake caliper.

Open bleeder valve and purge until clear, bubble-free brake fluid emerges.

Close bleed valve.

Follow same procedure on rear left, front right and front left wheel brake.

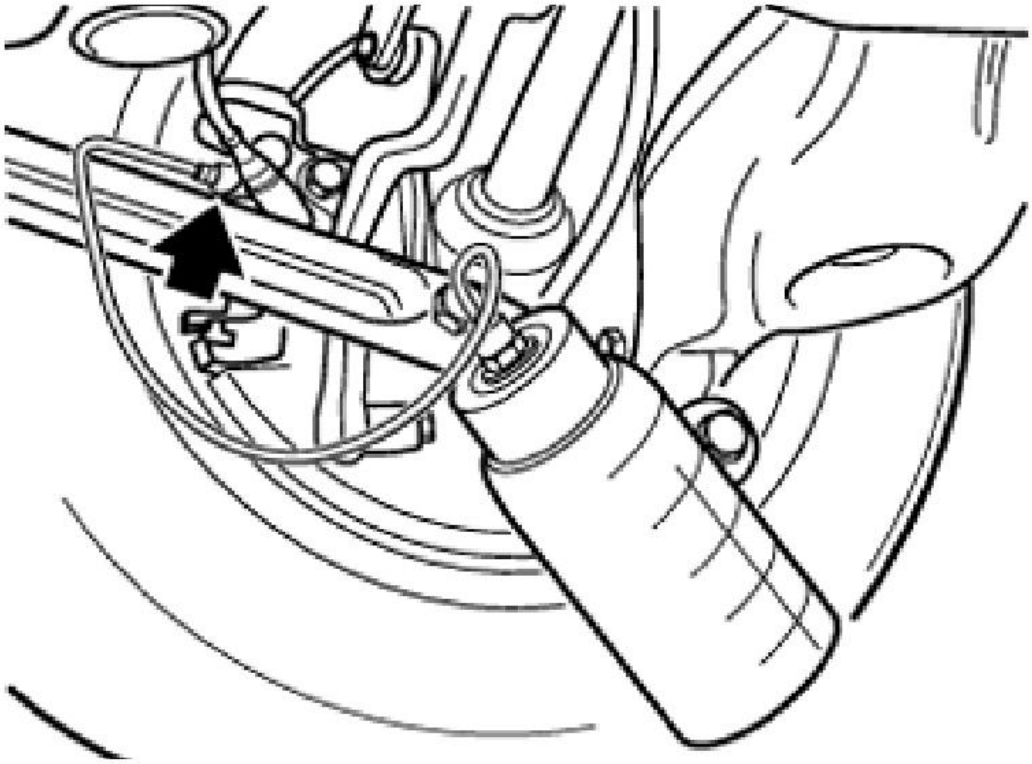

Fig. 9: View Of Bleeder Hose And Collecting Container (Rear Wheel)
Courtesy of BMW OF NORTH AMERICA, INC.

Bleeding Rear-Axle Brake Circuit:

Connect bleeder hose with collecting tray to bleeder valve on rear right brake caliper.

Close bleeder valve.

Run bleeding routine with DIS with bleeder valve open.

After completing routine, press brake pedal 5 times to floor; clear and bubble-free brake fluid must flow out.

Close bleed valve.

Repeat procedure at rear left.

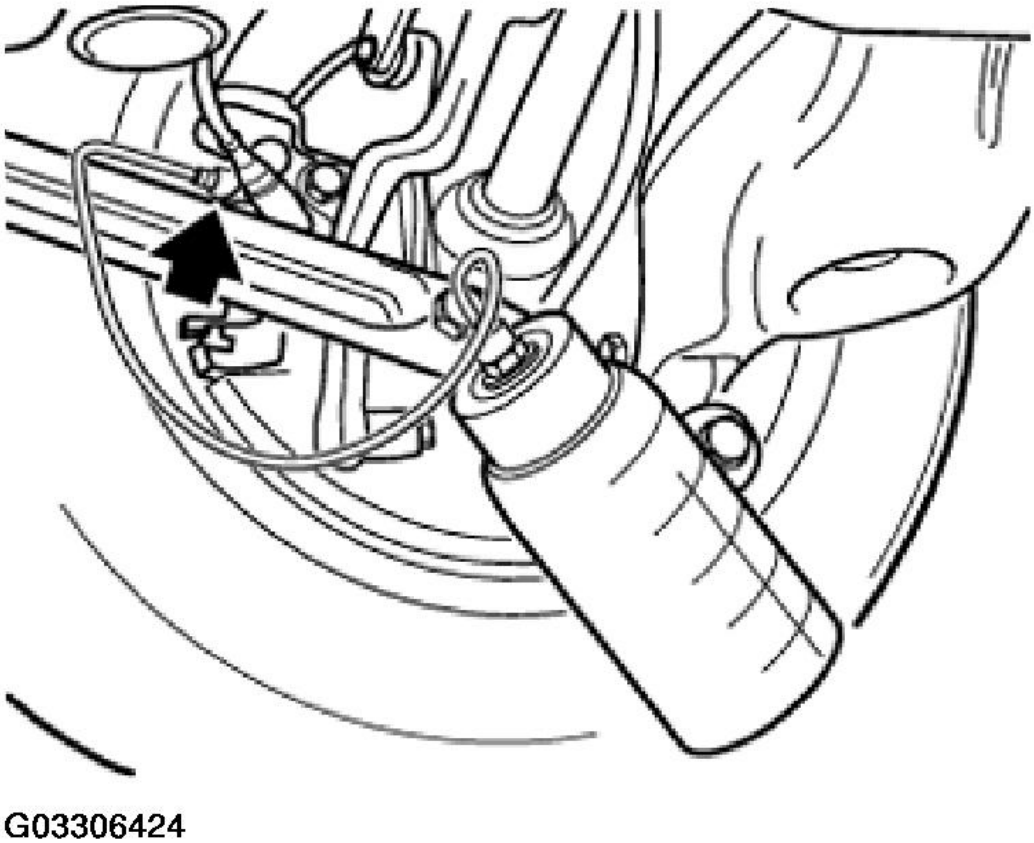

Fig. 10: View Of Bleeder Hose And Collecting Container (Rear Wheel)
Courtesy of BMW OF NORTH AMERICA, INC.

Bleeding Front-Axle Brake Circuit:

Connect bleeder hose with collecting tray to bleeder valve on front right brake caliper.

Close bleeder valve.

Run bleeding routine with DIS with bleeder valve open.

After completing routine, press brake pedal 5 times to floor, clear and bubble-free brake fluid must flow out.

Close bleed valve.

Repeat procedure at front left.

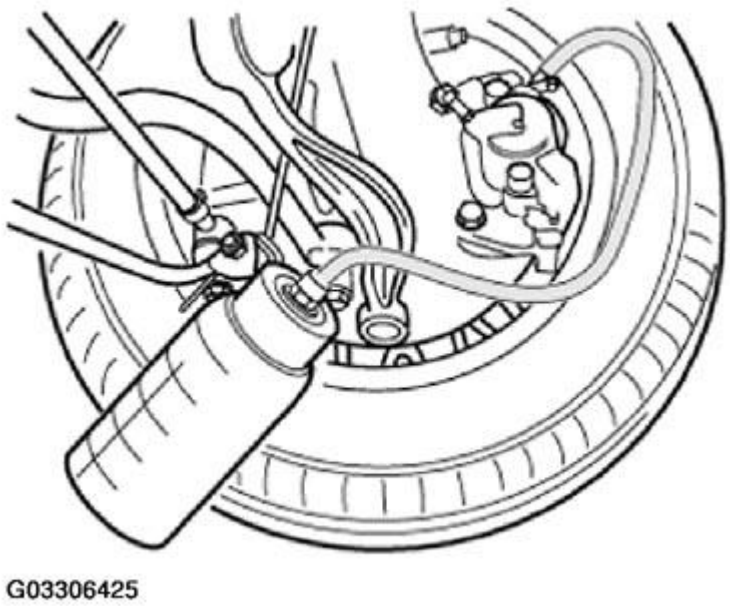

Fig. 11: View Of Bleeder Hose And Collecting Container (Front Wheel)
Courtesy of BMW OF NORTH AMERICA, INC.

Switch off brake fluid changer and remove from expansion tank.

Check brake fluid level.

Close expansion tank.

NOTE: Pay attention to rubber seal (1) in sealing cap.

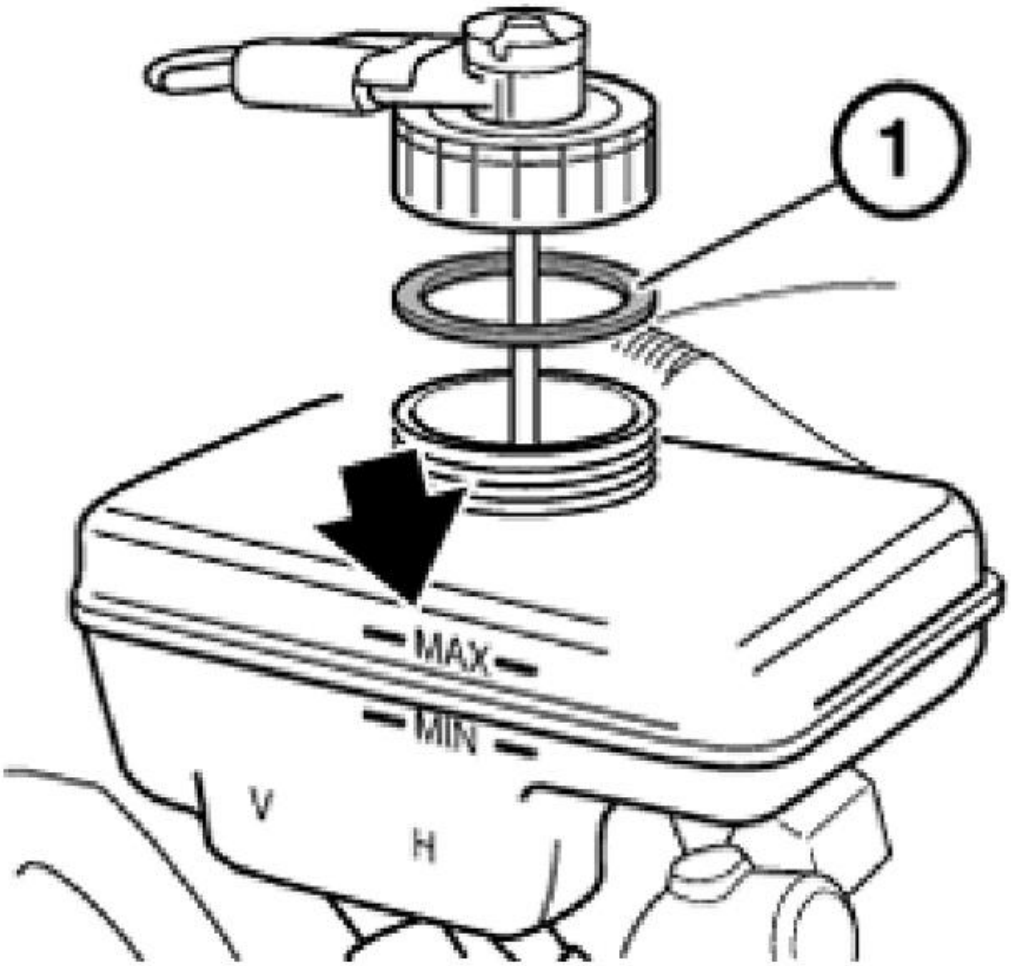

G03306426

Fig. 12: View Of Expansion Tank Rubber Gasket
Courtesy of BMW OF NORTH AMERICA, INC.

34 00 513 CHECKING PARKING BRAKE SETTING

This procedure is described in **34 10 014 ADJUSTING HANDBRAKE**.

FRONT BRAKES

34 11 000 REMOVING AND INSTALLING/REPLACING BRAKE LININGS ON BOTH FRONT DISK BRAKES

Necessary Preliminary Tasks:

- Remove wheels. Refer to **36 10 300 REMOVING OR INSTALLING FRONT OR REAR WHEEL** .

IMPORTANT: After completing the tasks, press the brake pedal to the floor several times to ensure the brake pads are firmly pressed against the brake discs. If the brake pads are replaced simultaneously on the front and rear axles, the brake fluid level must be checked and if necessary the brake fluid topped up to the "MAX" marking.

Detach retaining spring (1).

Installation:

Attach retaining spring first at bottom and then at top.

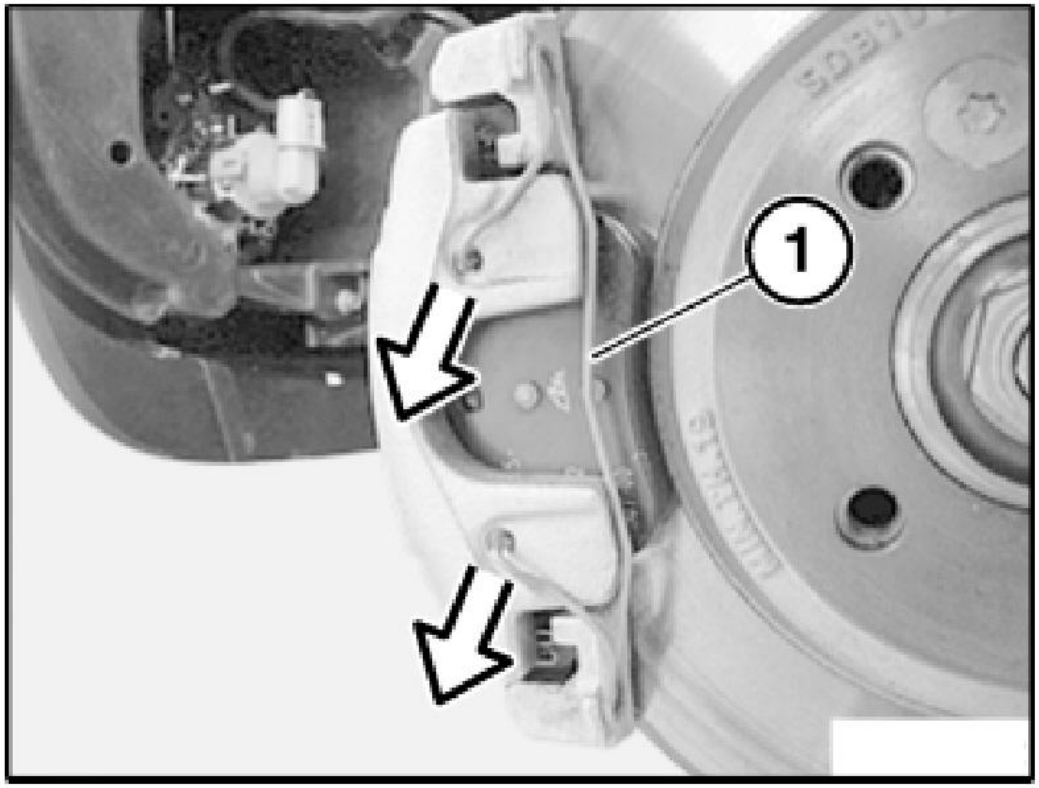

G03306427

Fig. 13: Locating Retaining Spring
Courtesy of BMW OF NORTH AMERICA, INC.

Remove plastic plugs (2).

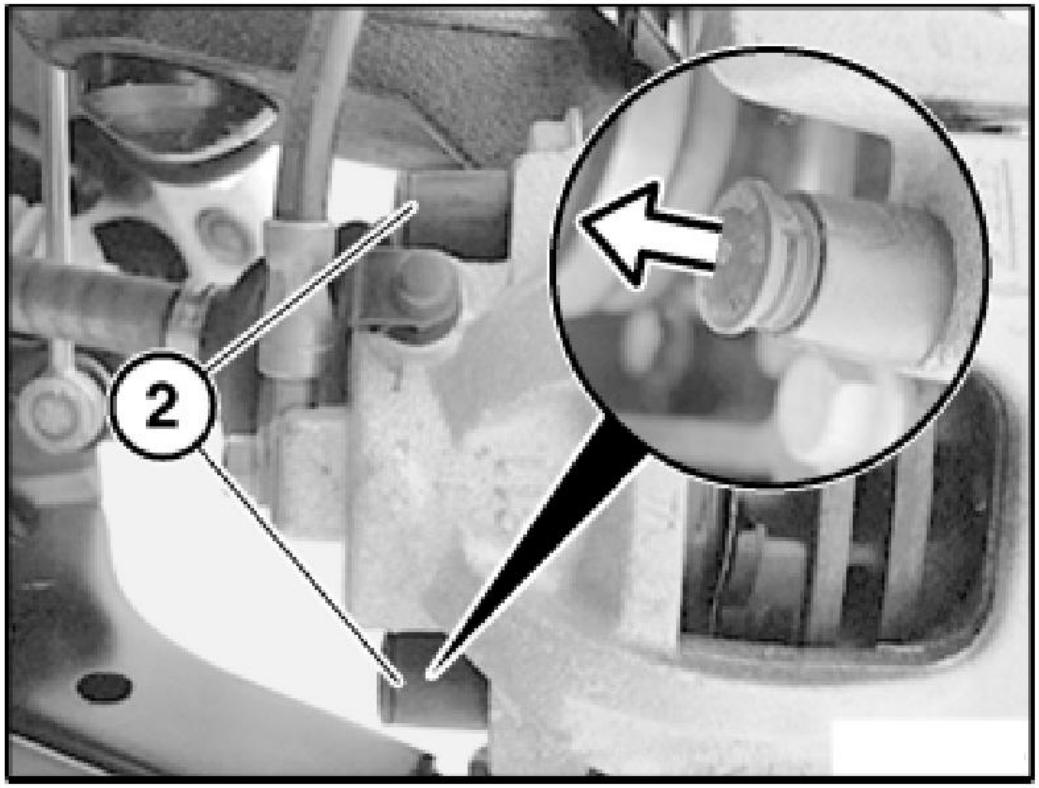

G03306428

Fig. 14: View Of Plastic Plugs
Courtesy of BMW OF NORTH AMERICA, INC.

Release guide screws (1) and pull brake caliper towards rear to remove.

Installation:

Only clean guide screws; do not grease.

Check threads.

Replace all guide screws which are not in perfect condition. Tightening torque, (32-38 N.m.).

IMPORTANT: Tie up brake caliper to relieve strain on brake hose.

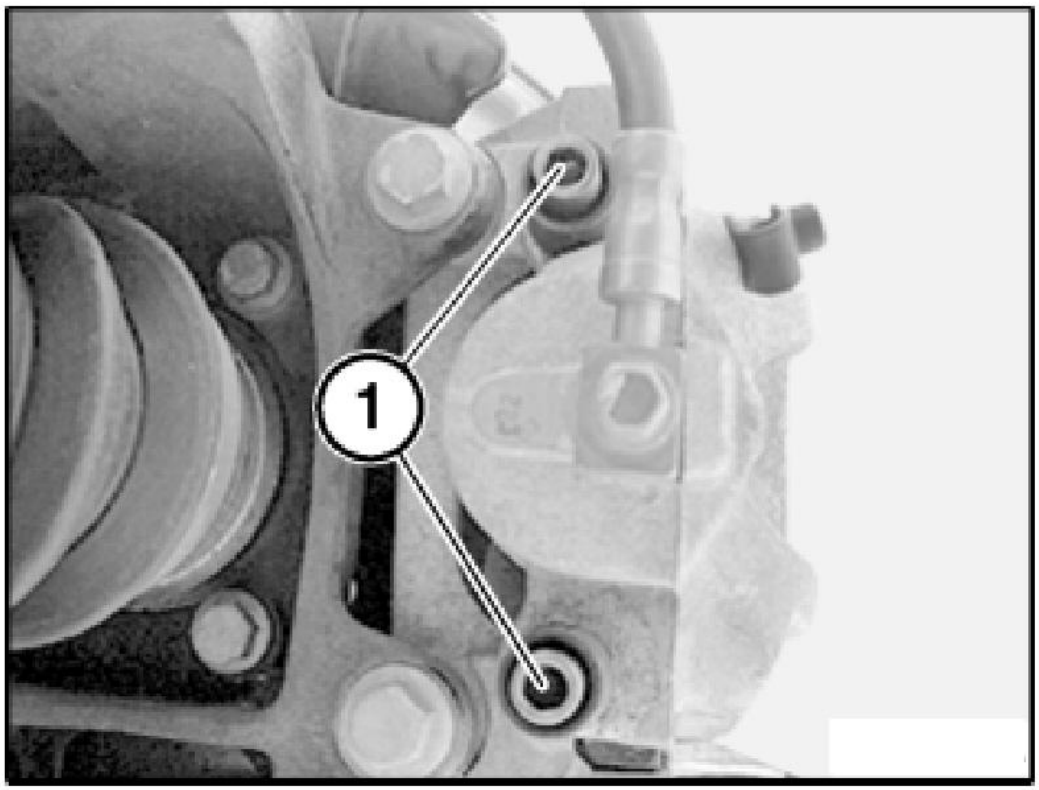

G03306429

Fig. 15: Locating Guide Screws
Courtesy of BMW OF NORTH AMERICA, INC.

Press piston fully back with special tool.

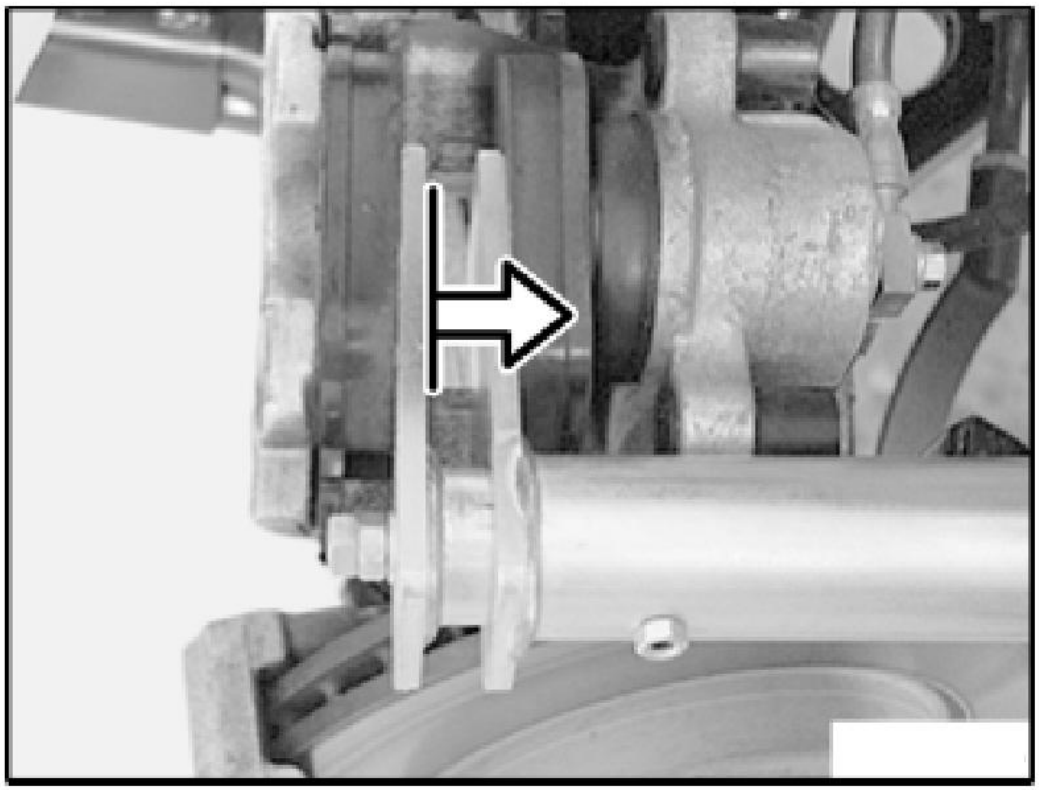

G03306430

Fig. 16: Aligning Brake Piston With Special Tool
Courtesy of BMW OF NORTH AMERICA, INC.

IMPORTANT: When pressing down piston, note brake fluid level in expansion tank. Overflowing brake fluid can attack the paintwork!

Remove outer brake pad. Inner brake lining is located with its spring in the piston.

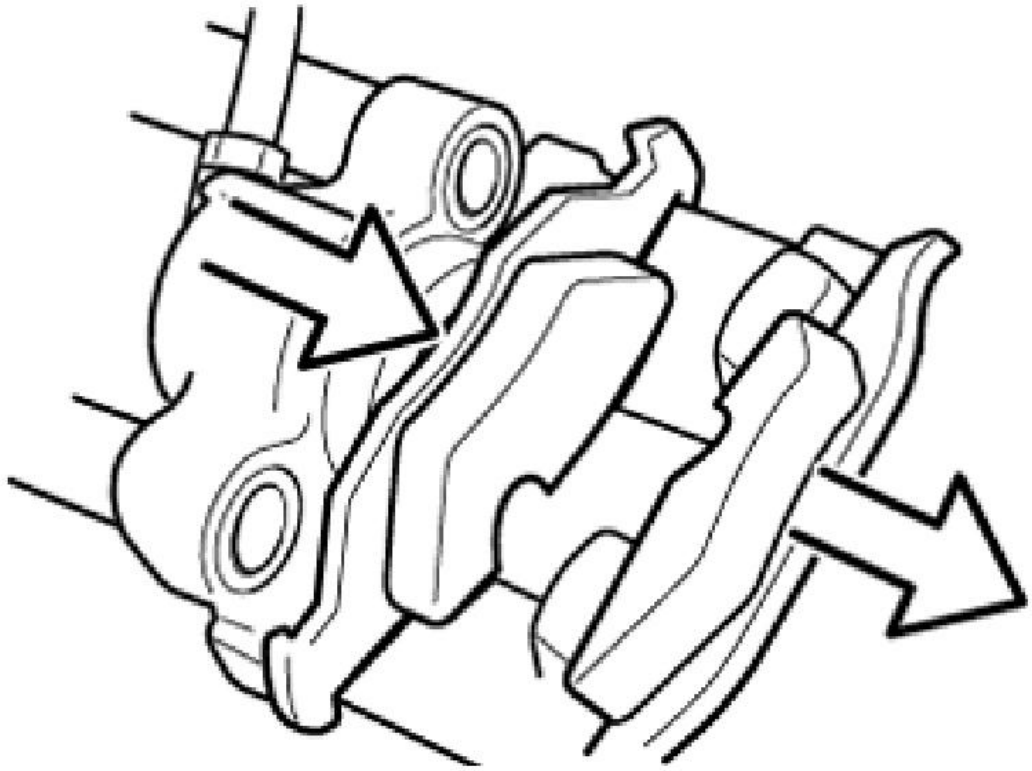

Fig. 17: Removing Outer Brake Pad
Courtesy of BMW OF NORTH AMERICA, INC.

IMPORTANT: Mark any worn brake linings. In the event of one-sided brake lining wear, do not change brake linings round. New brake linings may only be installed if the measured brake disk thickness is greater than or equal to the minimum brake disk thickness (MIN TH). Clean brake linings. Do not grease backs of brake linings sleeve.

Check dust sleeve (1) for damage and replace if necessary. Clean contact faces (2) of brake piston and apply a thin coating of anti-squeak compound.

IMPORTANT: The dust sleeve must not come into contact with antisqueak compound as this would cause the dust sleeve to swell.

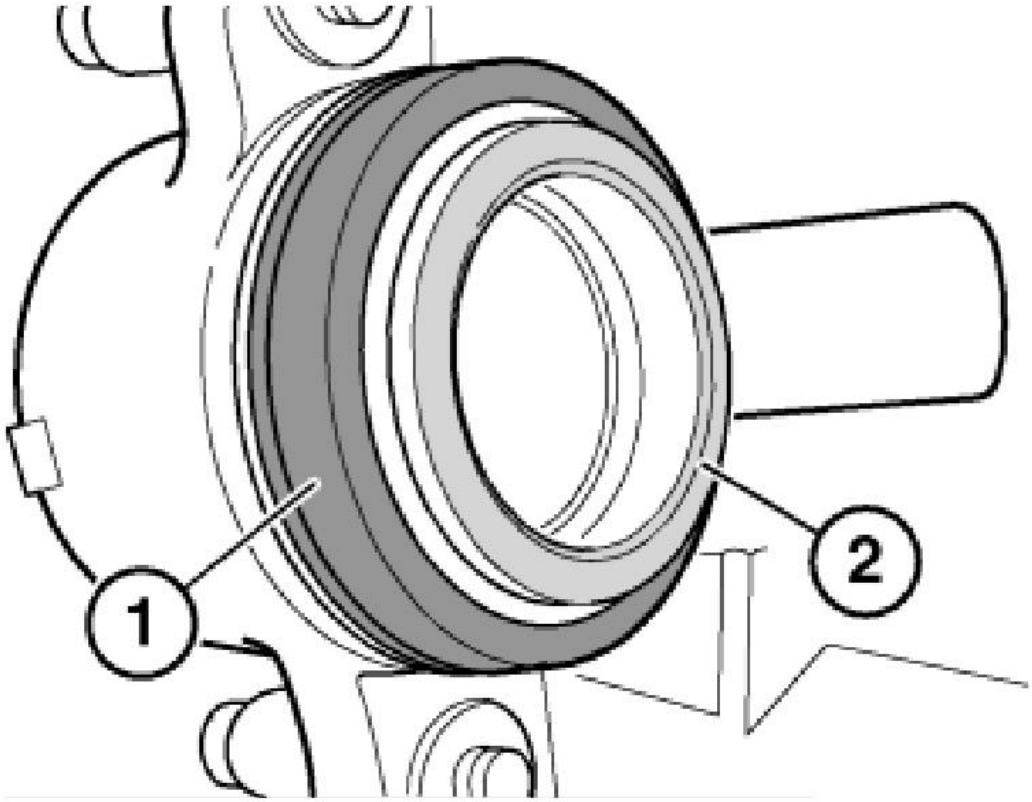

G03306432

Fig. 18: View Of Dust Sleeve
Courtesy of BMW OF NORTH AMERICA, INC.

Clean contact faces (1-2) of brake lining hammer heads/brake caliper housing and coat with anti-squeak compound.

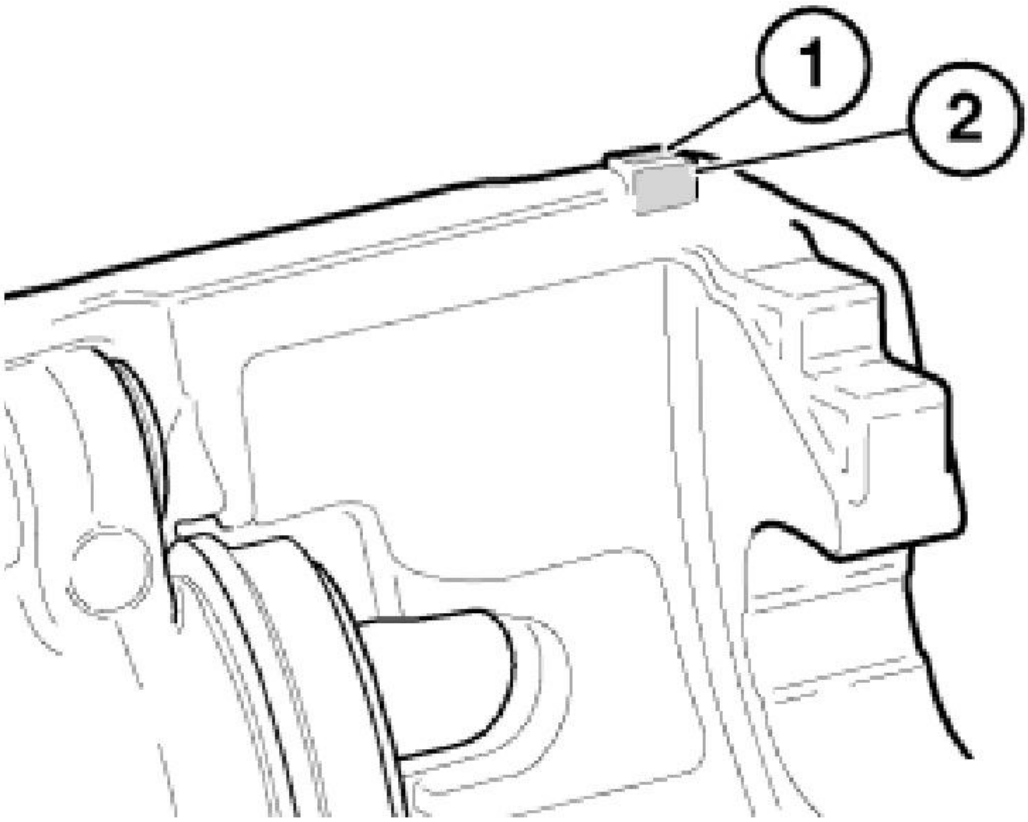

G03306433

Fig. 19: Identifying Brake Lining Hammer Heads Contact Faces
Courtesy of BMW OF NORTH AMERICA, INC.

Clean contact faces (3) of brake caliper and apply a thin coating of anti-squeak compound.

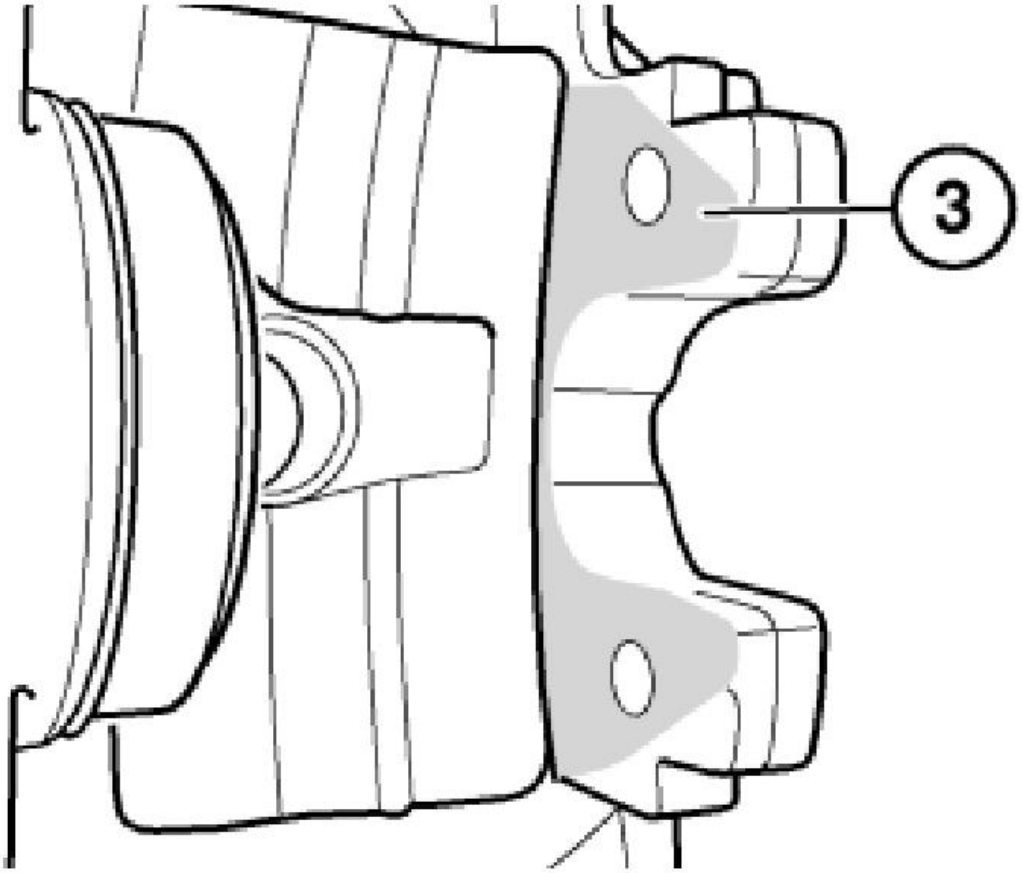

G03306434

Fig. 20: View Of Brake Caliper Contact Faces
Courtesy of BMW OF NORTH AMERICA, INC.

Clean hammer head guides at brake caliper mounting bracket and apply a thin coating of anti-squeak compound.

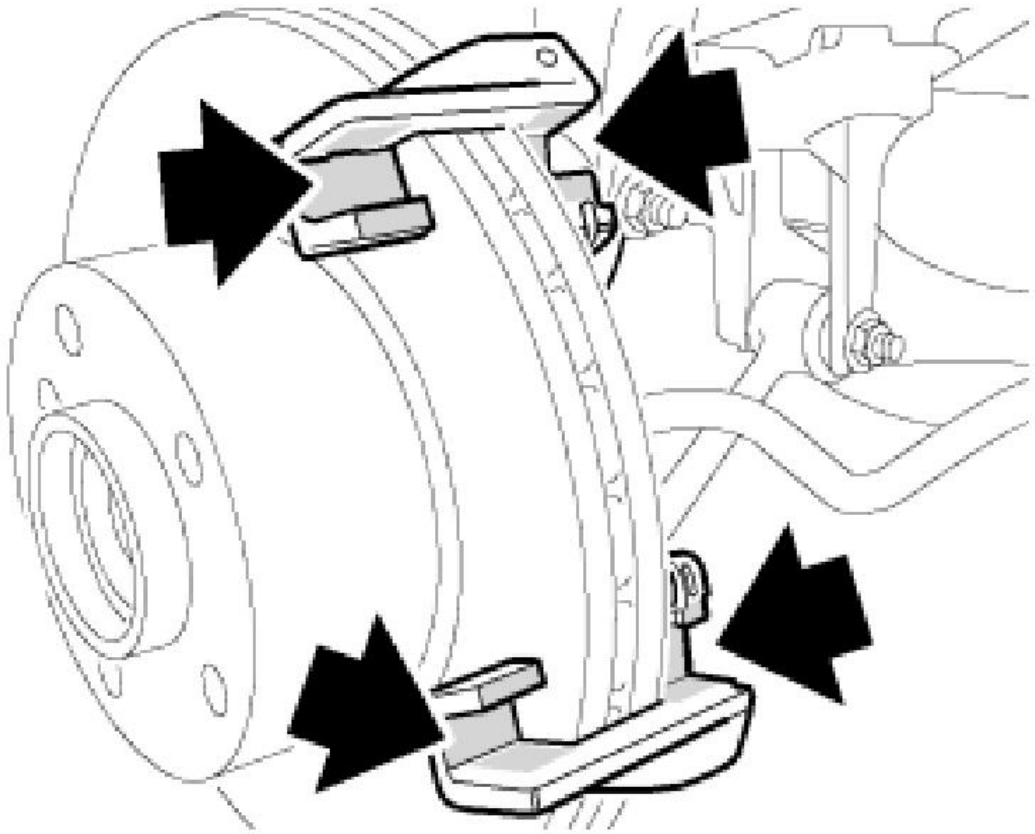

G03306435

Fig. 21: Locating Brake Caliper Mounting Bracket Hammer Head Guides
Courtesy of BMW OF NORTH AMERICA, INC.

34 11 220 REMOVING AND INSTALLING/REPLACING BOTH FRONT BRAKE DISKS

Necessary Preliminary Tasks:

- Remove front brake pads. Refer to **34 11 000 REMOVING AND INSTALLING/REPLACING BRAKE LININGS ON BOTH FRONT DISK BRAKES**.

IMPORTANT: If the thickness of the brake disks drops below the minimum brake disk thickness (MIN TH), then the brake disks must be replaced. Refer to BRAKES - TECHNICAL DATA - COOPER (1.6L) R50/W10 . Brake discs must only be replaced in pairs (per axle). Fit new brake discs only together with new brake pads.

Release screws (1) and remove brake carrier.

Installation:

Tightening torque, (110 N.m.).

NOTE: Brake hose remains connected.

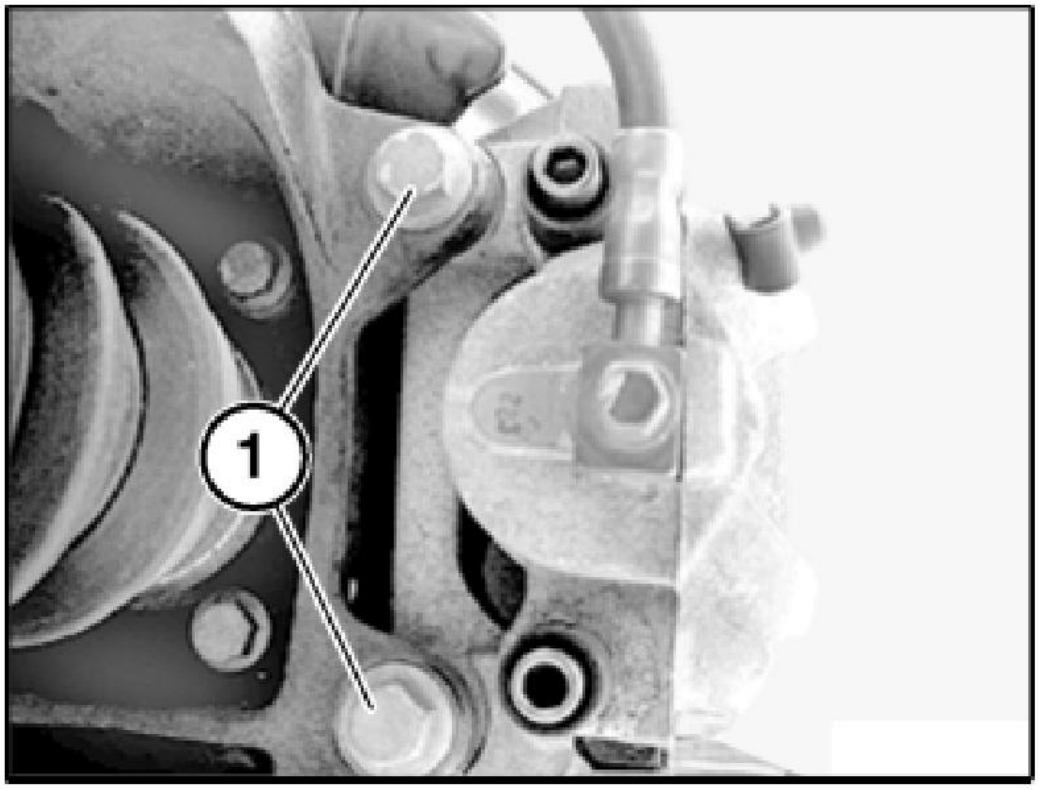

G03306436

Fig. 22: Locating Brake Carrier Retaining Screws
Courtesy of BMW OF NORTH AMERICA, INC.

IMPORTANT: When removing the brake disc: On no account strike the friction ring with a hammer or similar object! If necessary, carefully tap with a rubber hammer against the brake disc nave.

Release screw (1) and remove brake disk.

Installation:

Replace screw (1).

Clean contract face of wheel hub thoroughly and remove any traces of rust if necessary.

Irregularities in the contact surface can cause distortion in the brake disc!

Tightening torque, (27 N.m.).

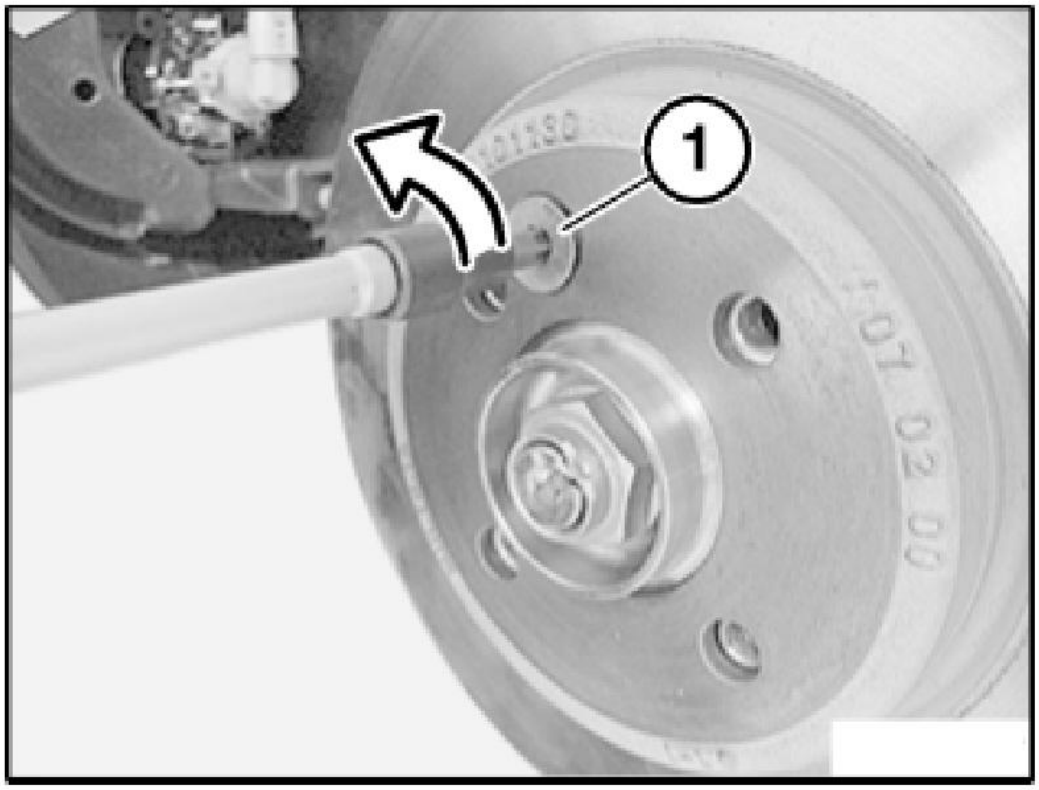

G03306437

Fig. 23: Identifying Brake Disk Retaining Screw
Courtesy of BMW OF NORTH AMERICA, INC.

34 11 250 REMOVING AND INSTALLING/REPLACING FRONT LEFT OR RIGHT BRAKE CONSOLE/BACK PLATE

Necessary Preliminary Tasks:

- Remove front brake disks. Refer to **34 11 220 REMOVING AND INSTALLING/REPLACING BOTH FRONT BRAKE DISKS**.

Release screws (1) and remove brake back plate.

Installation:

Tightening torque, (8 N.m.).

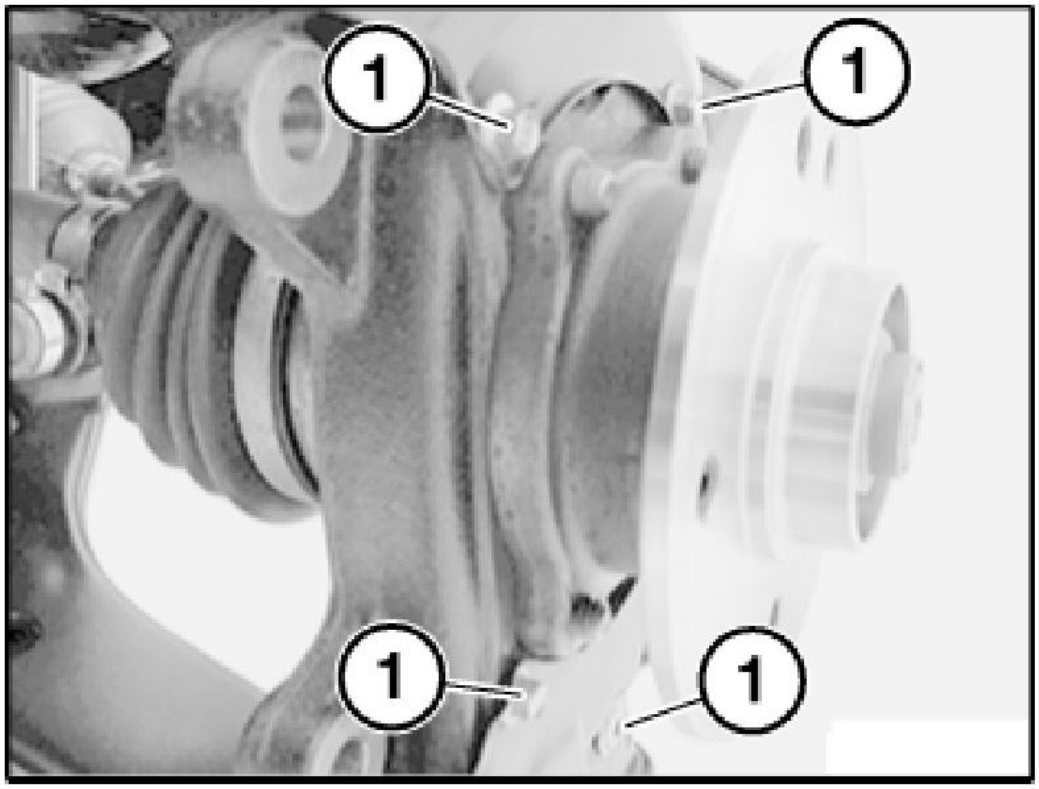

G03306438

Fig. 24: View Of Brake Back Plate Retaining Screws
Courtesy of BMW OF NORTH AMERICA, INC.

34 11 519 REMOVING AND INSTALLING/REPLACING LEFT OR RIGHT FRONT BRAKE CALIPER

Necessary Preliminary Tasks:

- Remove front wheels. Refer to **36 10 300 REMOVING OR INSTALLING FRONT OR REAR**

WHEELS .

NOTE: After completing tasks, bleed brake system. Refer to 34 00 048 BLEEDING BRAKE SYSTEM WITH ABS/ASC+T.

Apply pedal prop and depress brake pedal slightly. This prevents brake fluid from emerging from the expansion tank and air from entering the brake system after the brake lines have been detached.

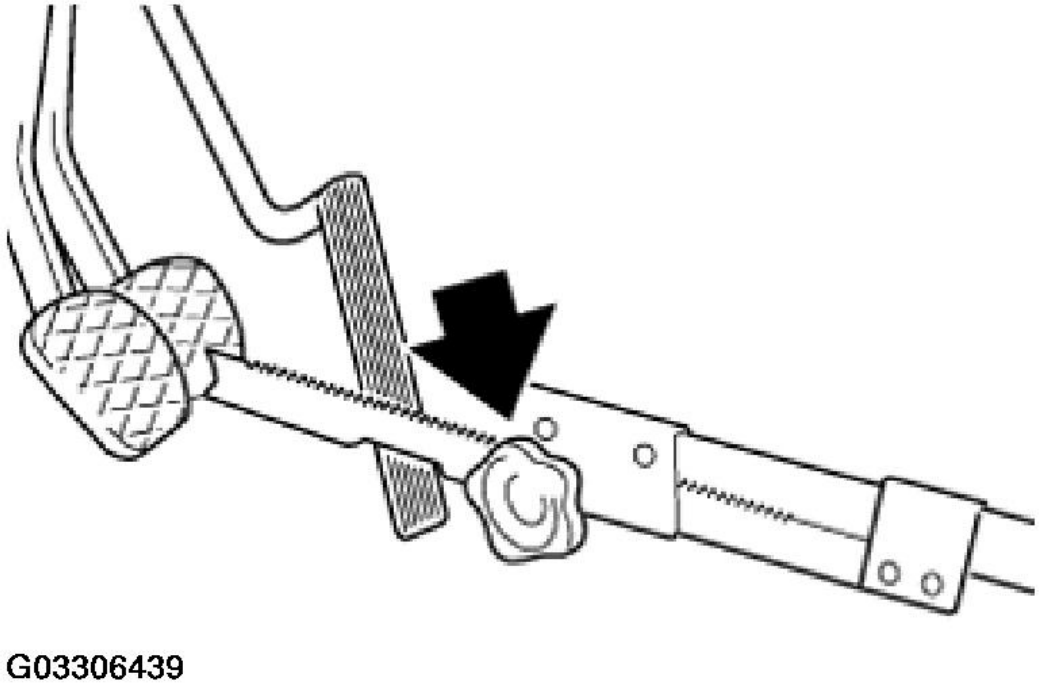

Fig. 25: Securing Brake Pedal With Pedal Prop
Courtesy of BMW OF NORTH AMERICA, INC.

Detach brake line from brake caliper.

Installation:

Replace sealing rings. Tightening torque, (40 N.m.).

Detach retaining spring (1).

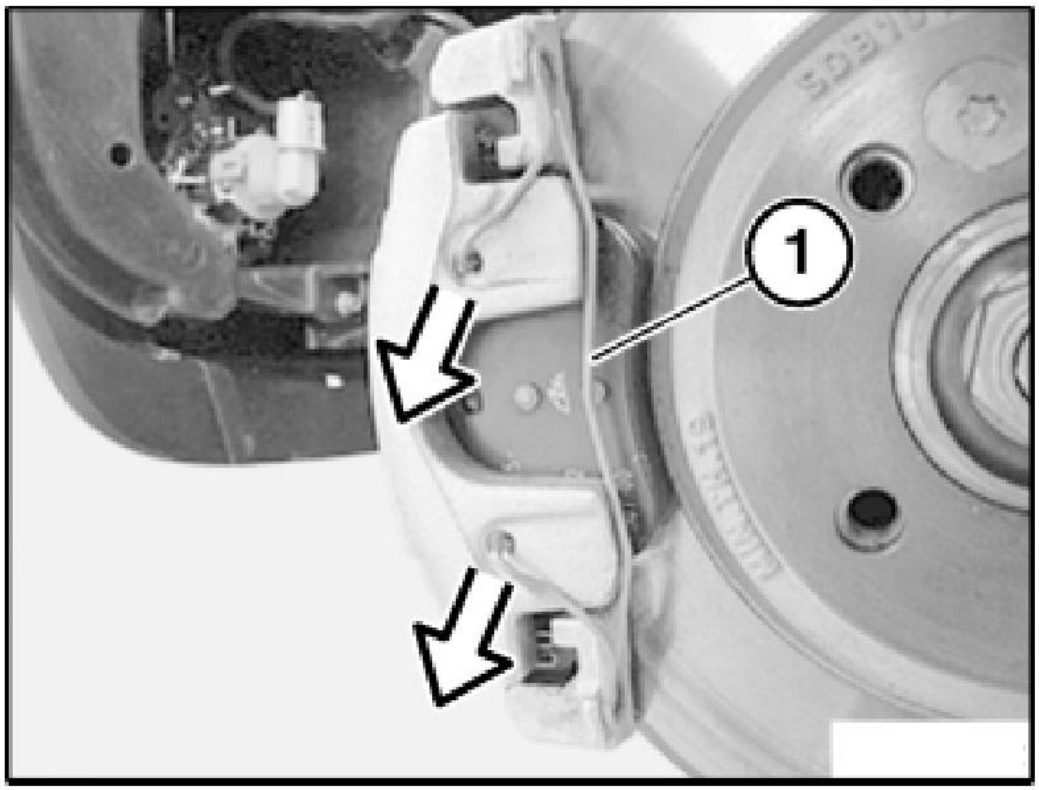

G03306440

Fig. 26: Locating Retaining Spring
Courtesy of BMW OF NORTH AMERICA, INC.

Remove plastic plugs (2).

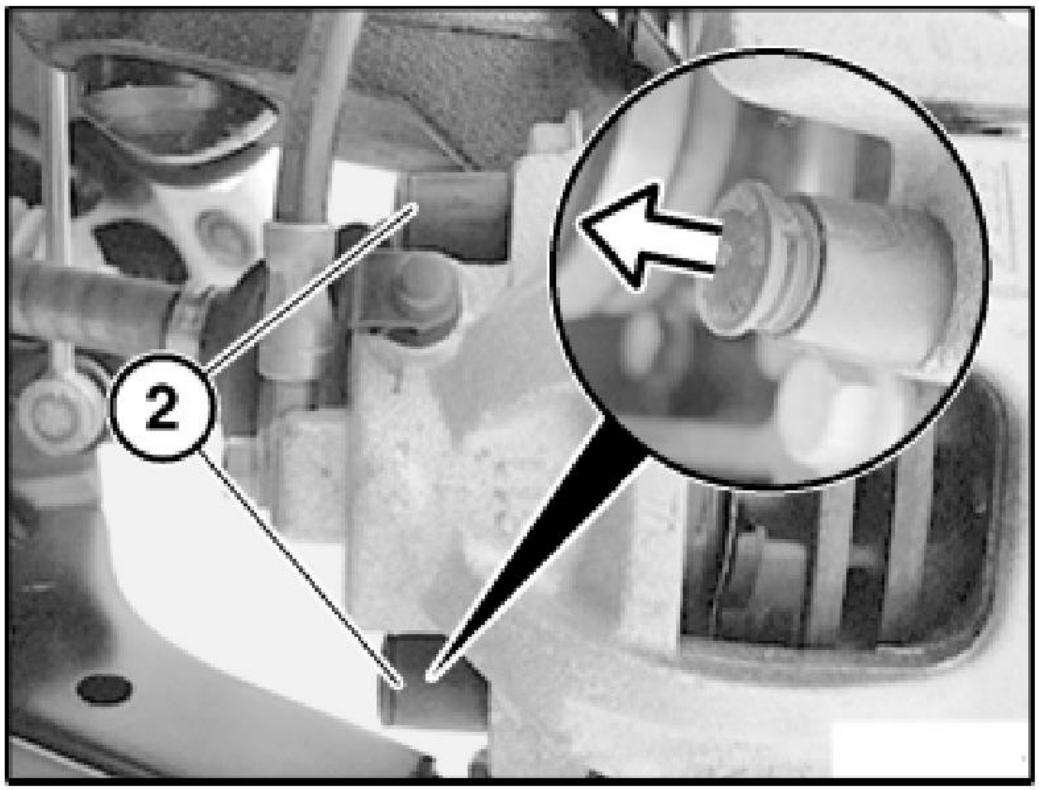

G03306441

Fig. 27: Identifying Plastic Plugs
Courtesy of BMW OF NORTH AMERICA, INC.

Release guide screws (1) and remove brake caliper towards front.

Installation:

Only clean guide screws; do not grease.

Check threads.

Replace all guide screws which are not in perfect condition.

Installation:

Tightening torque, (32-38 N.m.).

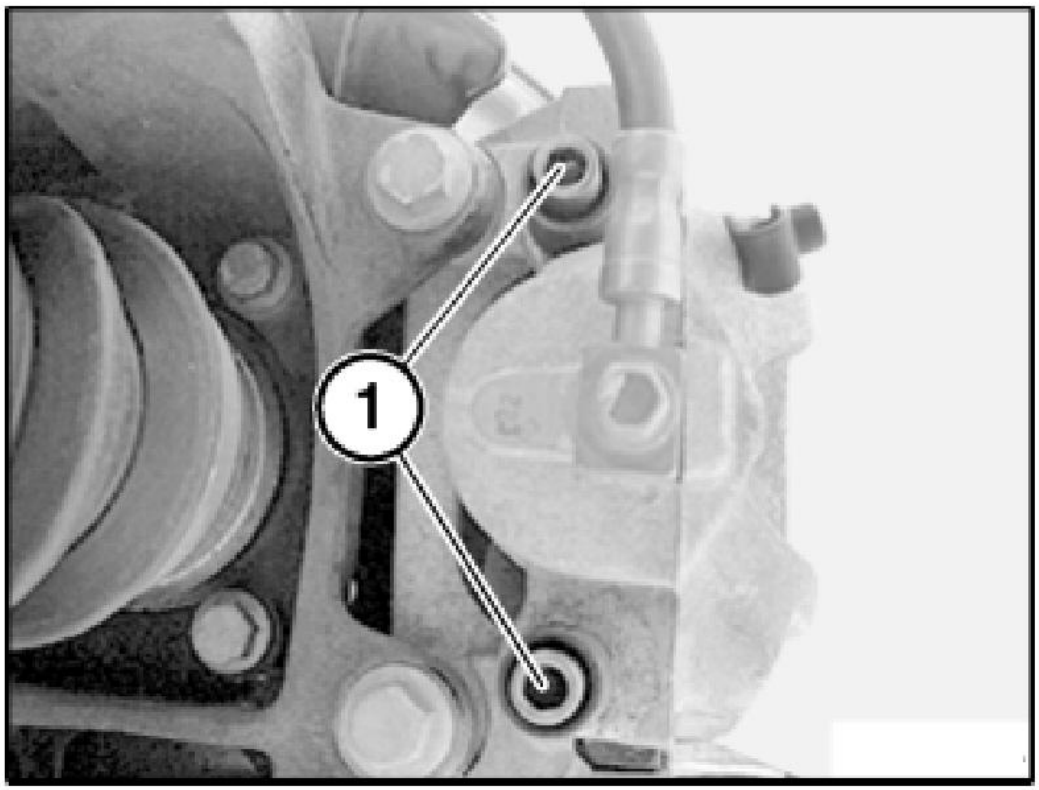

G03306442

Fig. 28: View Of Guide Screws
Courtesy of BMW OF NORTH AMERICA, INC.

34 11 552 OVERHAULING FRONT LEFT OR RIGHT BRAKE CALIPER

NOTE: **For Special Tool identification, see BRAKES - SPECIAL TOOLS - COOPER (1.6L) R50/W10 .**

Special Tools Required:

- 34 6 302
- 34 6 304
- 34 6 305

Necessary Preliminary Tasks:

- Remove brake caliper. Refer to **34 11 519 REMOVING AND INSTALLING/REPLACING LEFT**

OR RIGHT FRONT BRAKE CALIPER.

IMPORTANT: Use only BMW approved repair kit.

Remove both brake pads.

NOTE: The inner brake pad is held by a spring in the piston.

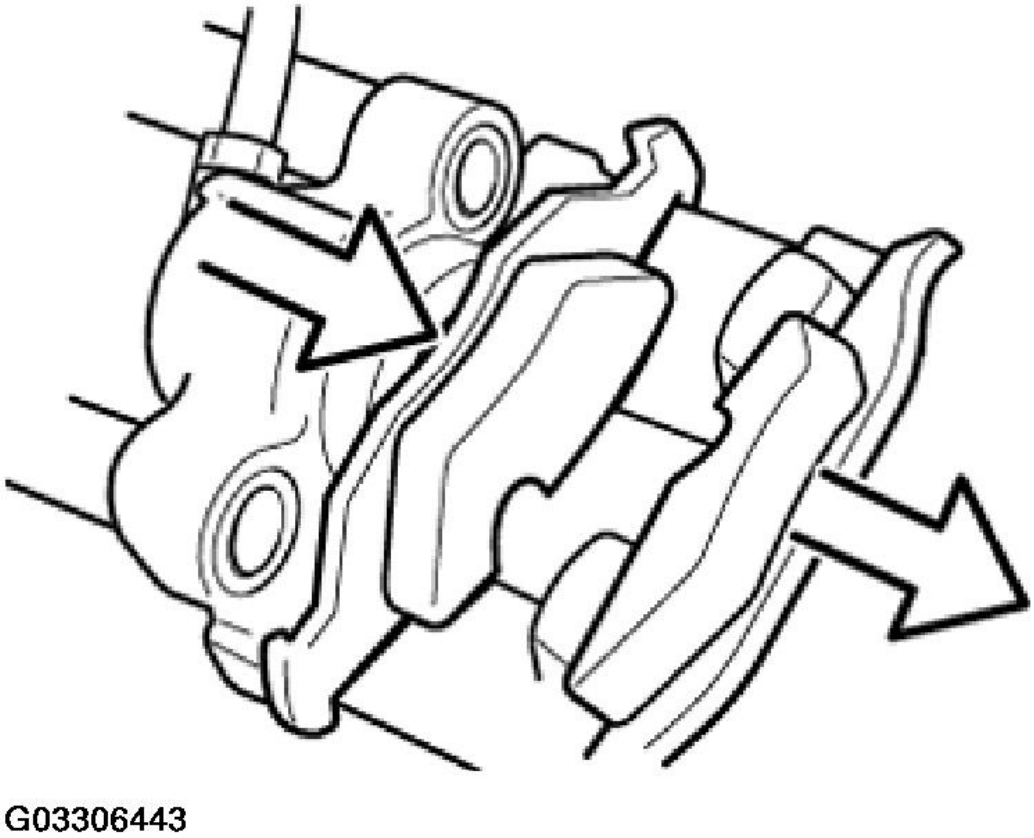

Fig. 29: Removing Both Brake Pads
Courtesy of BMW OF NORTH AMERICA, INC.

Carefully remove dust sleeve.

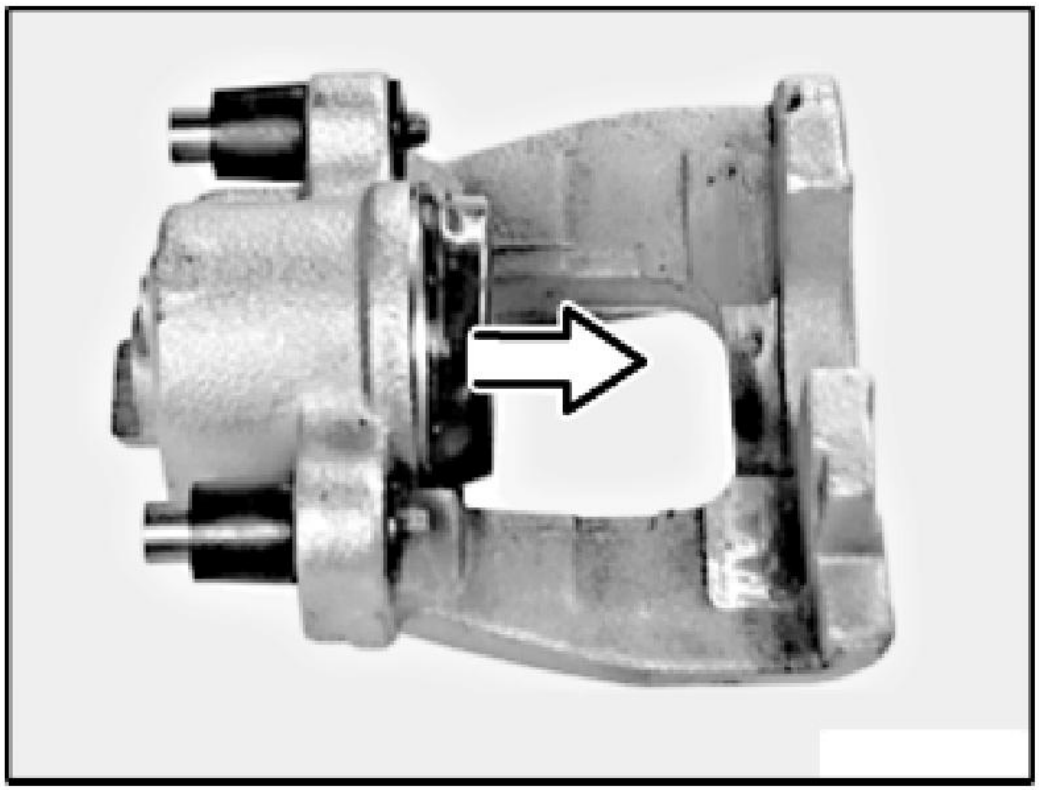

G03306444

Fig. 30: Removing Dust Sleeve
Courtesy of BMW OF NORTH AMERICA, INC.

WARNING: **In the following work step, large forces occur at the brake caliper piston (up to more than 2800 N). Danger of injury!**

Carefully force piston out through connection bore with compressed air.

Fit a protective plate (e.g. hard wood or hard felt) in the caliper well to protect the piston.

Do NOT grip piston with fingers - risk of trapping!

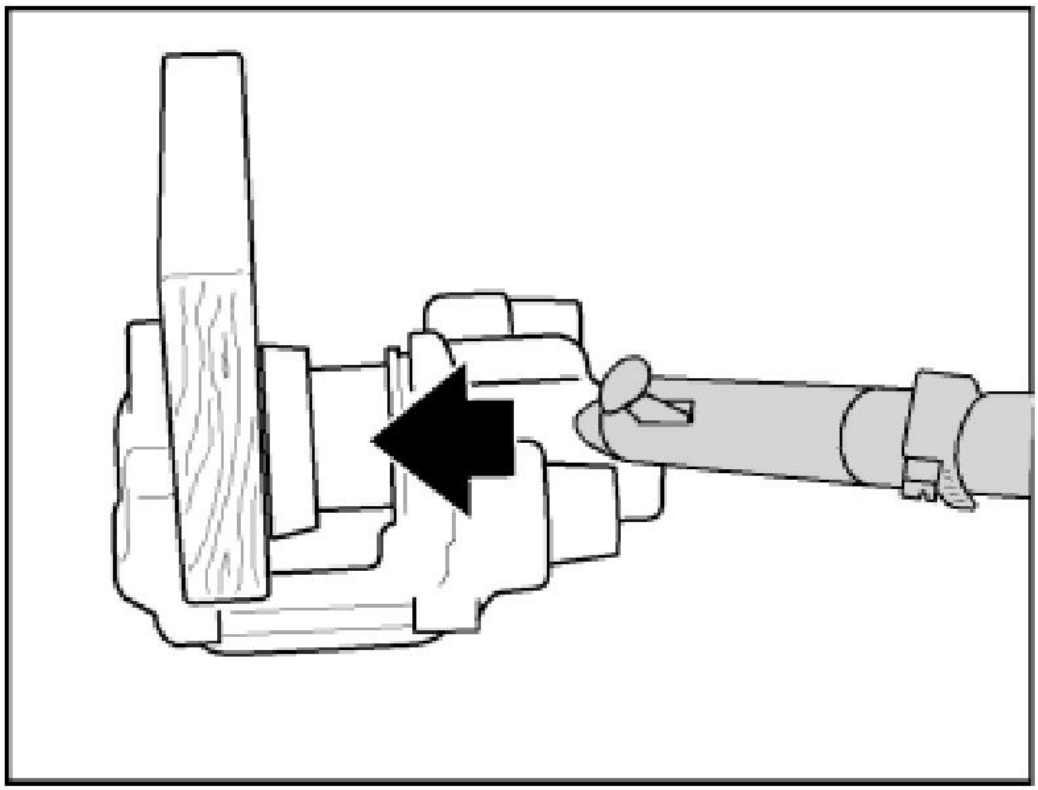

G03306445

Fig. 31: Removing Piston Out Through Connection Bore
Courtesy of BMW OF NORTH AMERICA, INC.

Check guide sleeves (1) and fit repair kit guide sleeves if necessary.

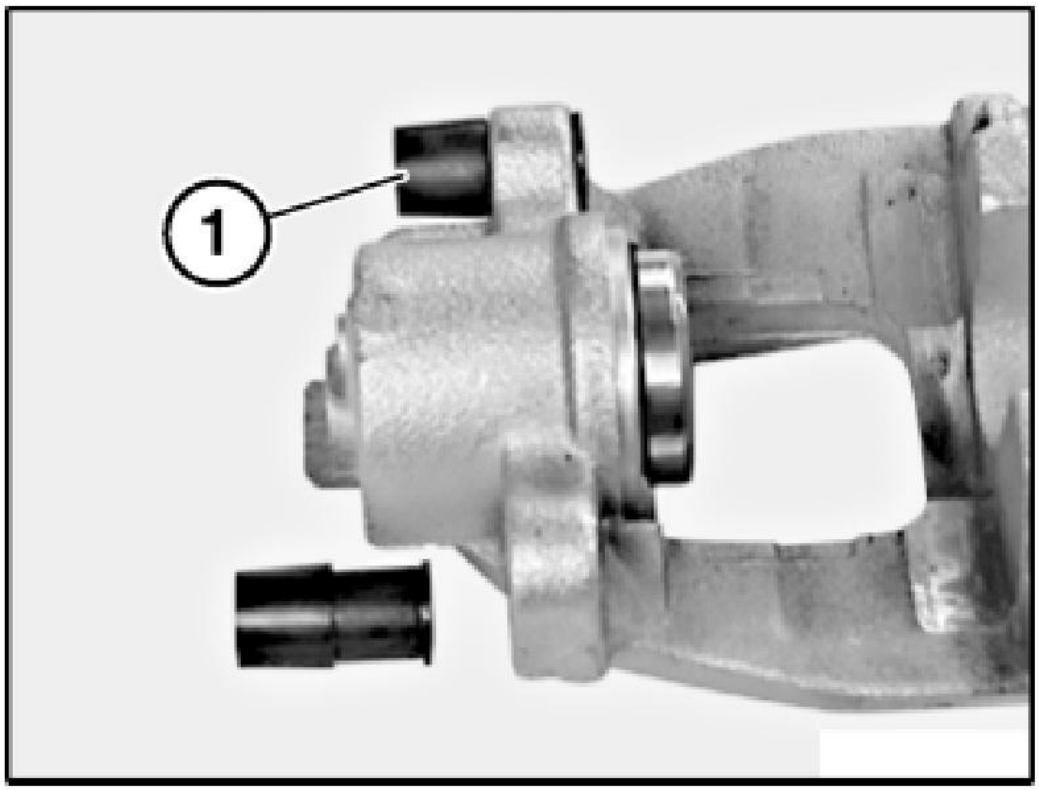

G03306446

Fig. 32: View Of Repair Kit Guide Sleeves
Courtesy of BMW OF NORTH AMERICA, INC.

Carefully remove sealing ring with a plastic needle.

Clean cylinder bores and parts with alcohol and dry with compressed air.

Thoroughly check cylinder bore, piston and flange faces.

IMPORTANT: Machining of cylinders and pistons is not permitted.

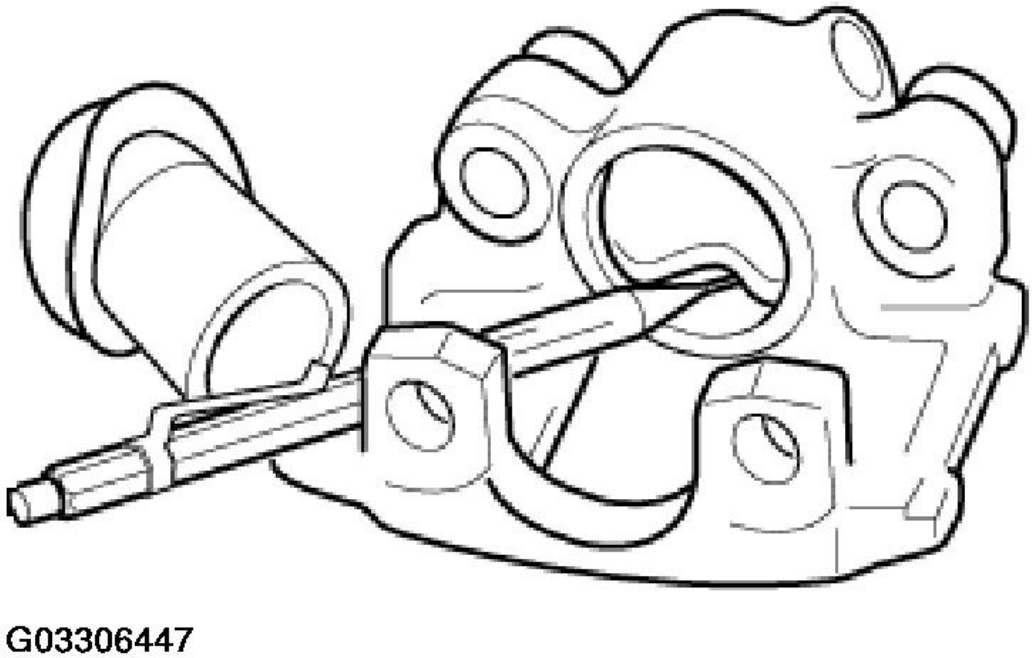

Fig. 33: Removing Sealing Ring With Plastic Needle
Courtesy of BMW OF NORTH AMERICA, INC.

Installation:

Apply a thin coat of ATE brake cylinder paste to cylinder bore, piston and sealing sleeve.

Install sealing cover (1) in annular groove of cylinder bore.

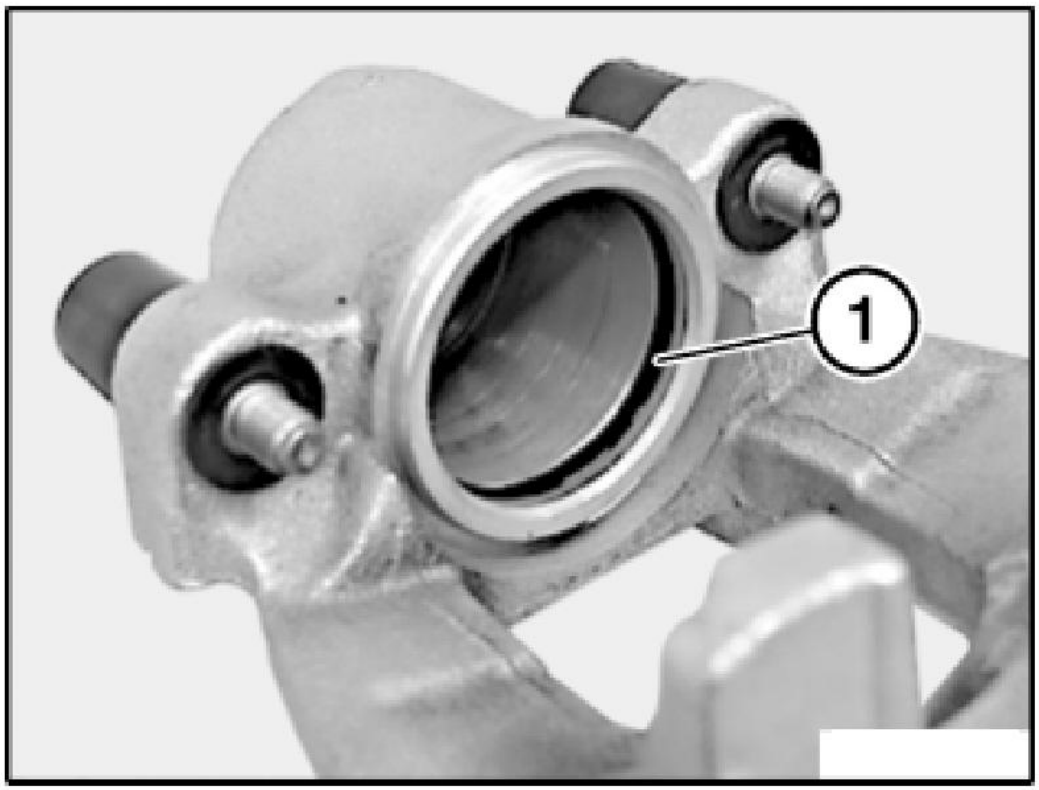

G03306448

Fig. 34: Installing Sealing Cover In Annular Groove Of Cylinder Bore
Courtesy of BMW OF NORTH AMERICA, INC.

Fit dust sleeve (1).

Using a commercially available extension and socket, carefully press brake piston into the bore.

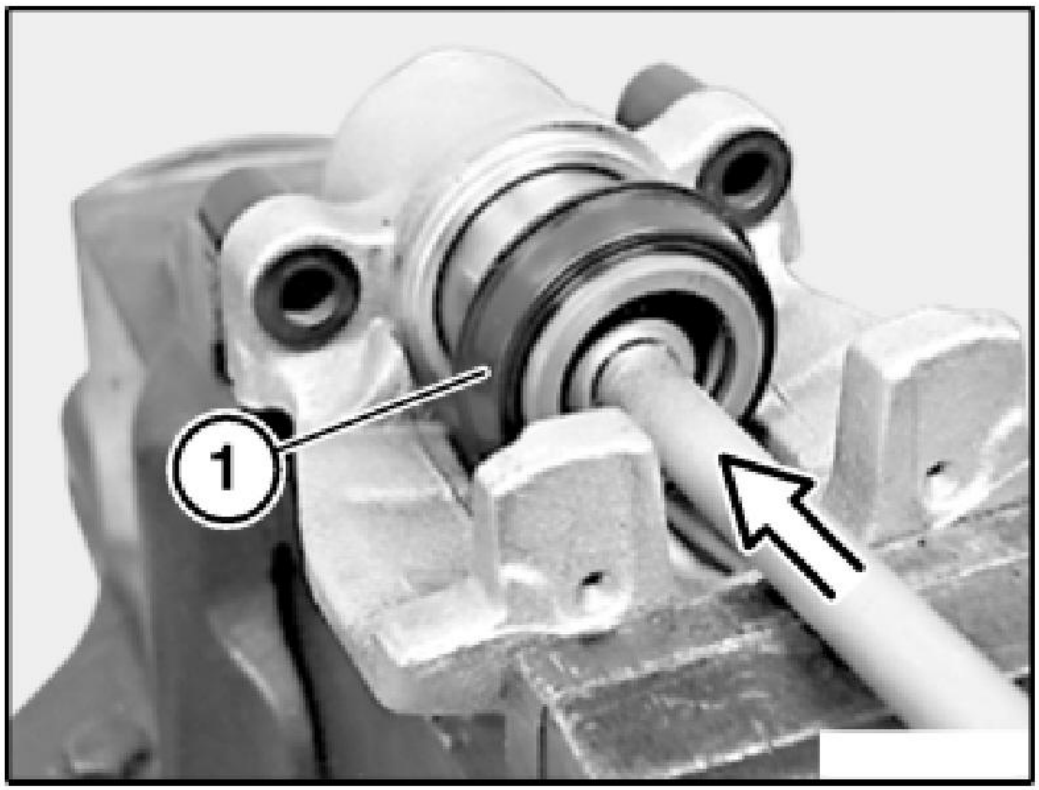

G03306449

Fig. 35: Identifying Dust Sleeve
Courtesy of BMW OF NORTH AMERICA, INC.

Make sure the dust guard is free of grease and brake fluid.

Use special tools 34 6 302, 34 6 304 and 34 6 305 to fit dust guard on brake caliper.

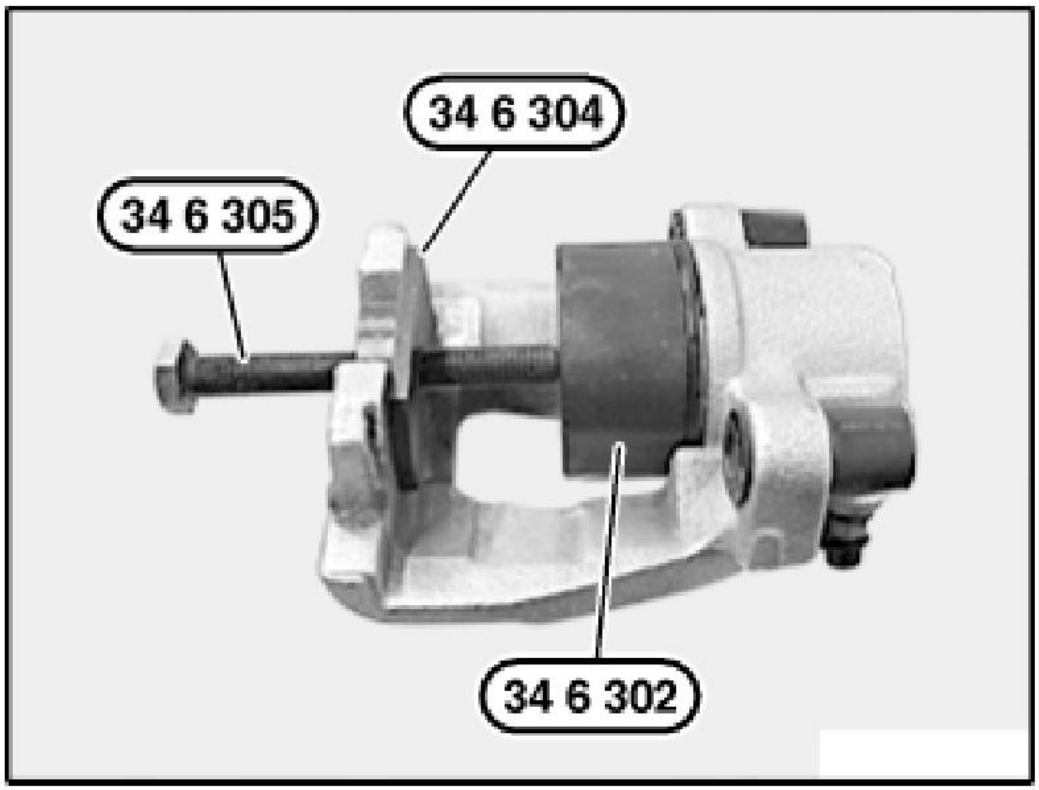

G03306450

Fig. 36: Installing Dust Guard On Brake Caliper Using Special Tools
Courtesy of BMW OF NORTH AMERICA, INC.

REAR BRAKES

34 21 200 REMOVING AND INSTALLING OR REPLACING BRAKE LININGS ON BOTH REAR DISK BRAKES

NOTE: **For Special Tool identification, see BRAKES - SPECIAL TOOLS - COOPER (1.6L) R50/W10 .**

Special Tools Required:

- 34 6 301
- 34 6 306
- 34 6 307
- 34 6 308

Necessary Preliminary Tasks:

- Remove wheels. Refer to **36 10 300 REMOVING OR INSTALLING FRONT OR REAR WHEEL** .

IMPORTANT: After completing the tasks, press the brake pedal to the floor several times to ensure the brake pads are firmly pressed against the brake discs. If the brake pads are replaced simultaneously on the front and rear axles, the brake fluid level must be checked and if necessary the brake fluid topped up to the "MAX" marking.

Detach retaining spring (1).

Installation:

Attach retaining spring first at bottom and then at top.

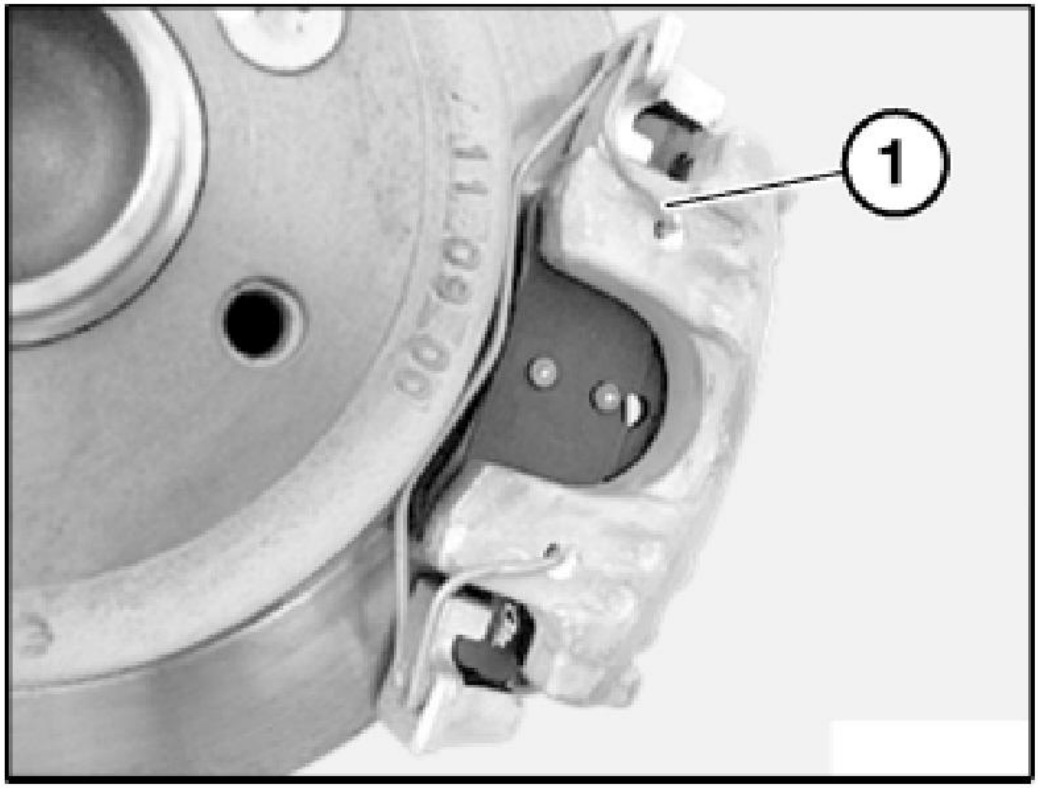

G03306451

Fig. 37: Locating Retaining Spring
Courtesy of BMW OF NORTH AMERICA, INC.

Remove plastic plugs (2).

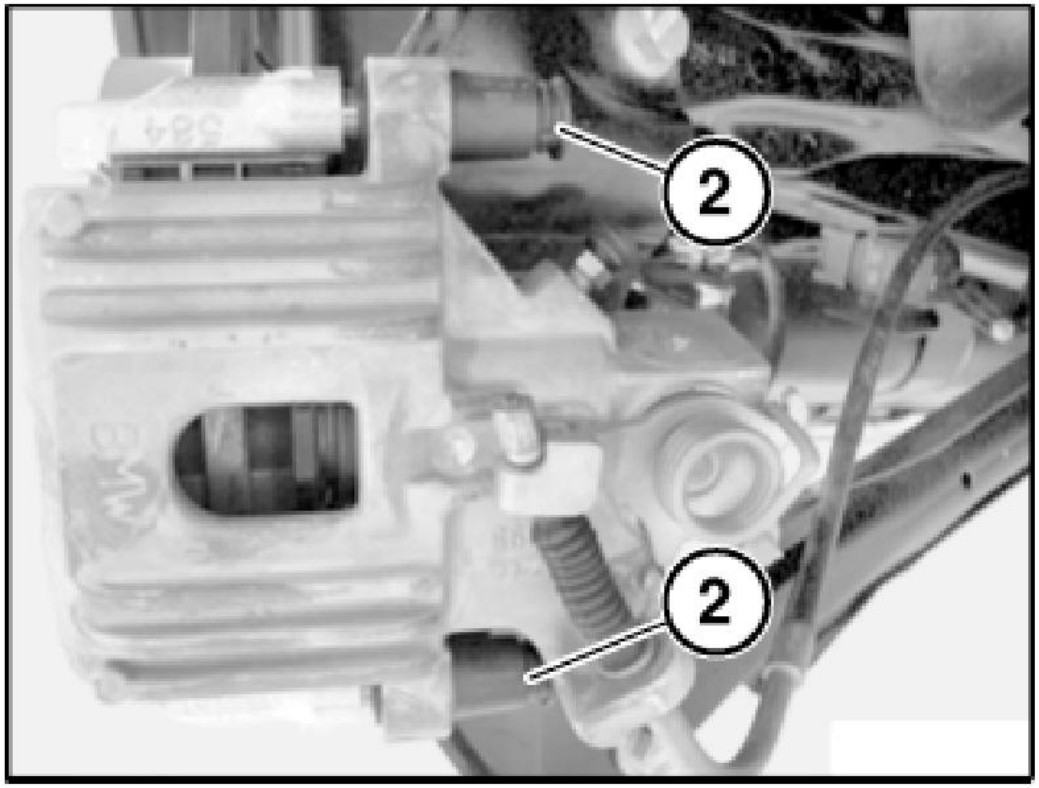

G03306452

Fig. 38: Identifying Plastic Plugs
Courtesy of BMW OF NORTH AMERICA, INC.

Unscrew guide screws (2).

Installation:

Only clean guide screws; do not grease. Check threads.

Replace all guide screws which are not in perfect condition.

Tightening torque, (32-38 N.m.).

IMPORTANT: Tie up brake caliper to relieve strain on brake hose.

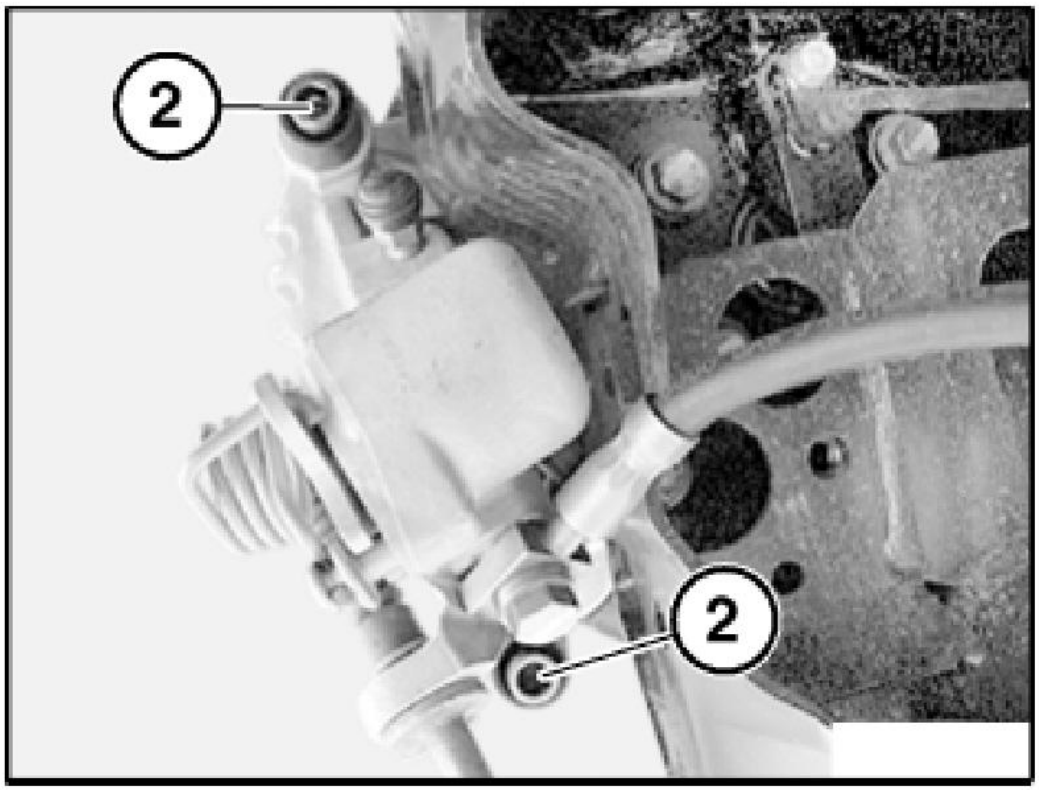

G03306453

Fig. 39: View Of Guide Screws
Courtesy of BMW OF NORTH AMERICA, INC.

Remove brake pads.

Using special tools 34 6 301 / 34 6 306 / 34 6 307 / 34 6 308 fit brake piston in brake caliper as illustrated.

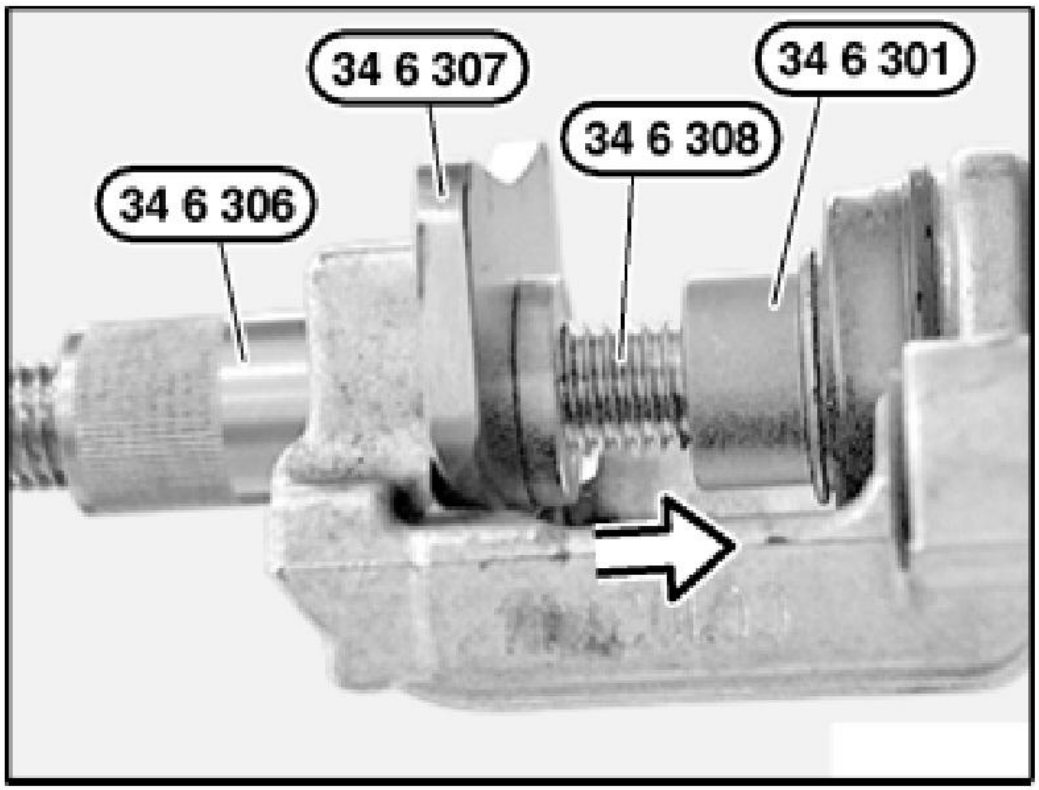

G03306454

Fig. 40: Installing Brake Piston In Brake Caliper Using Special Tools
Courtesy of BMW OF NORTH AMERICA, INC.

Check dust sleeve (1) for damage and replace if necessary. Clean contact faces (2) of brake piston and apply a thin coating of anti-squeak compound.

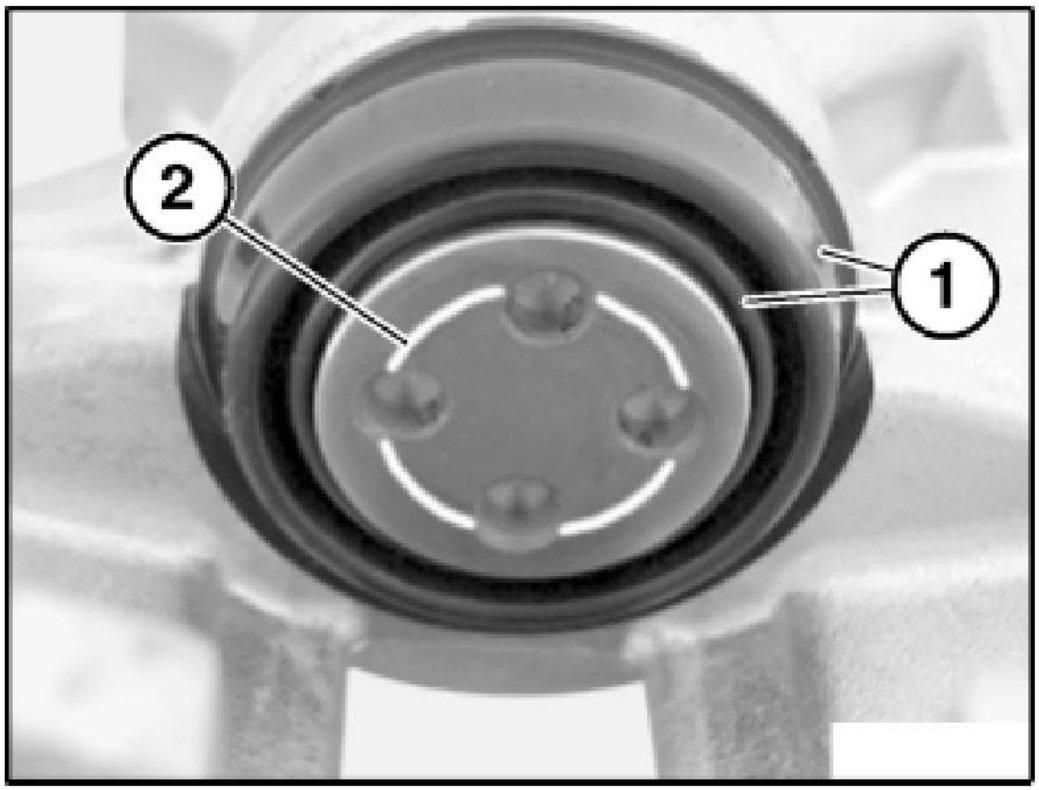

G03306455

Fig. 41: View Of Dust Sleeve
Courtesy of BMW OF NORTH AMERICA, INC.

IMPORTANT: The dust sleeve must not come into contact with antisqueak compound as this would cause the dust sleeve to swell.

Clean contact faces (1) and (2) of hammer heads/brake caliper housing and coat with anti-squeak compound.

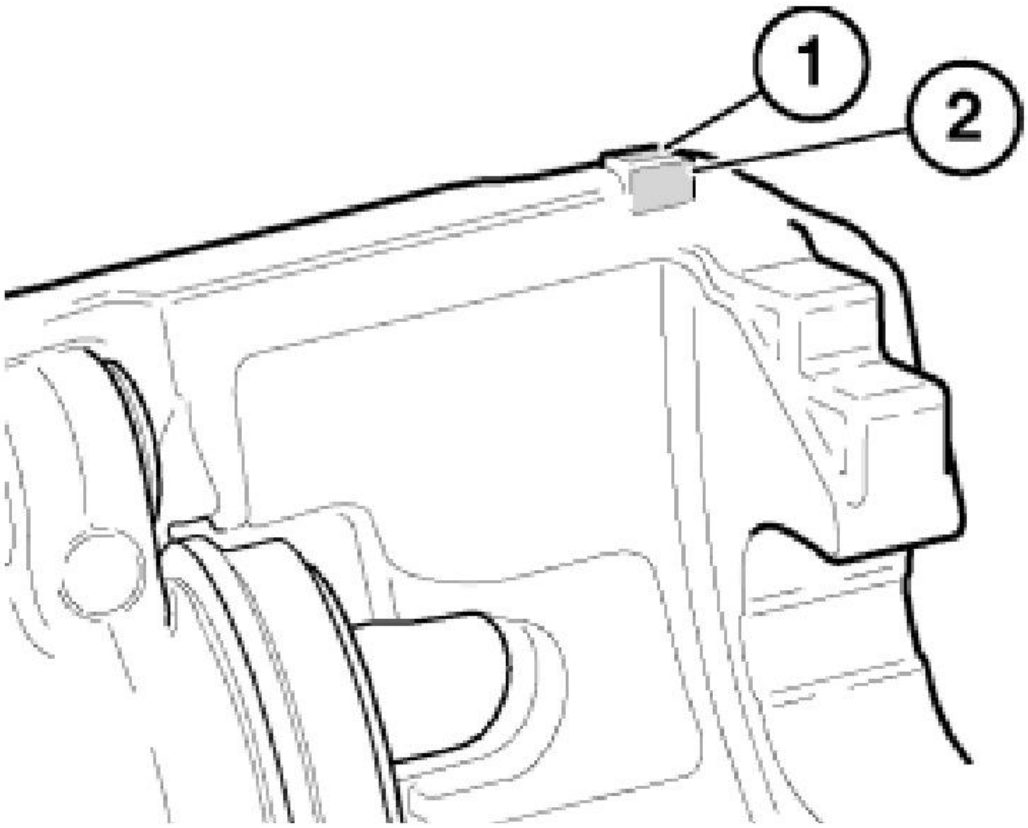

G03306456

Fig. 42: Identifying Contact Faces Of Hammer Heads/Brake Caliper Housing
Courtesy of BMW OF NORTH AMERICA, INC.

Clean contact faces (3) of brake caliper and apply a thin coating of anti-squeak compound.

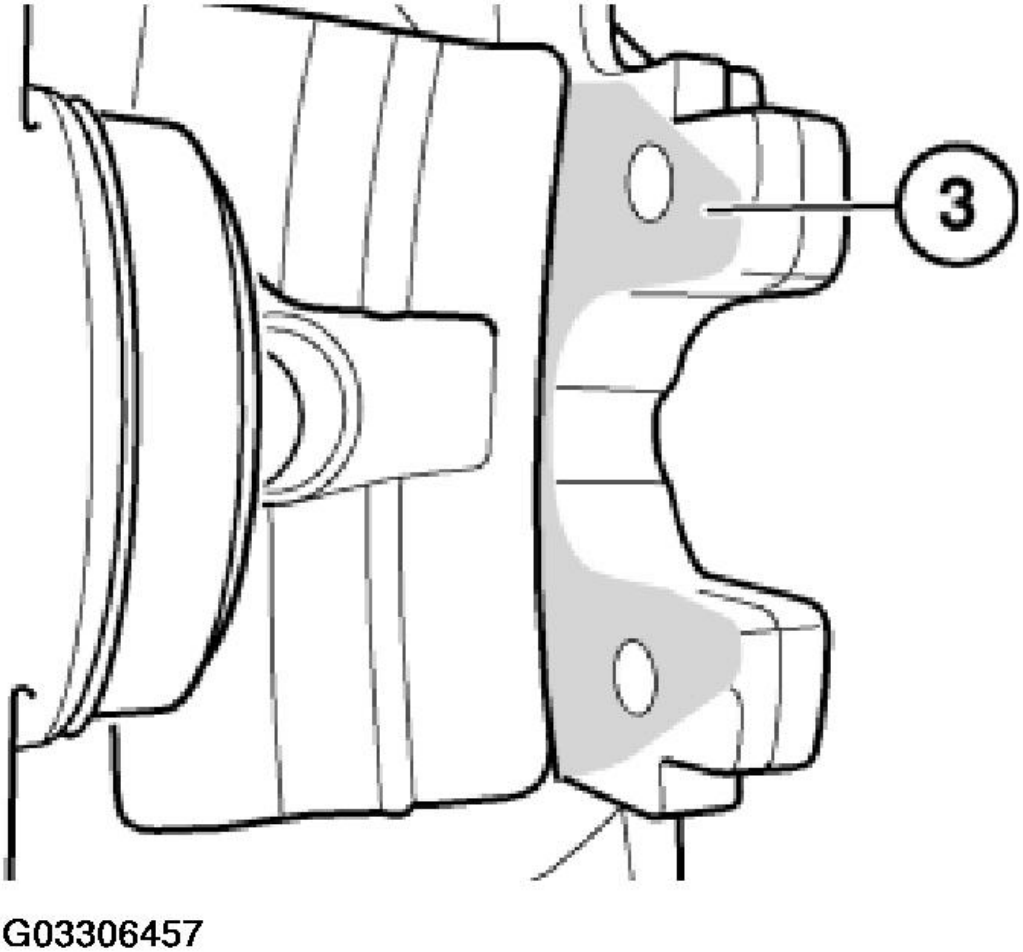

Fig. 43: View Of Contact Faces Of Brake Caliper
Courtesy of BMW OF NORTH AMERICA, INC.

Clean brake caliper mounting bracket at hammer head guides and apply a thin coating of anti-squeak compound.

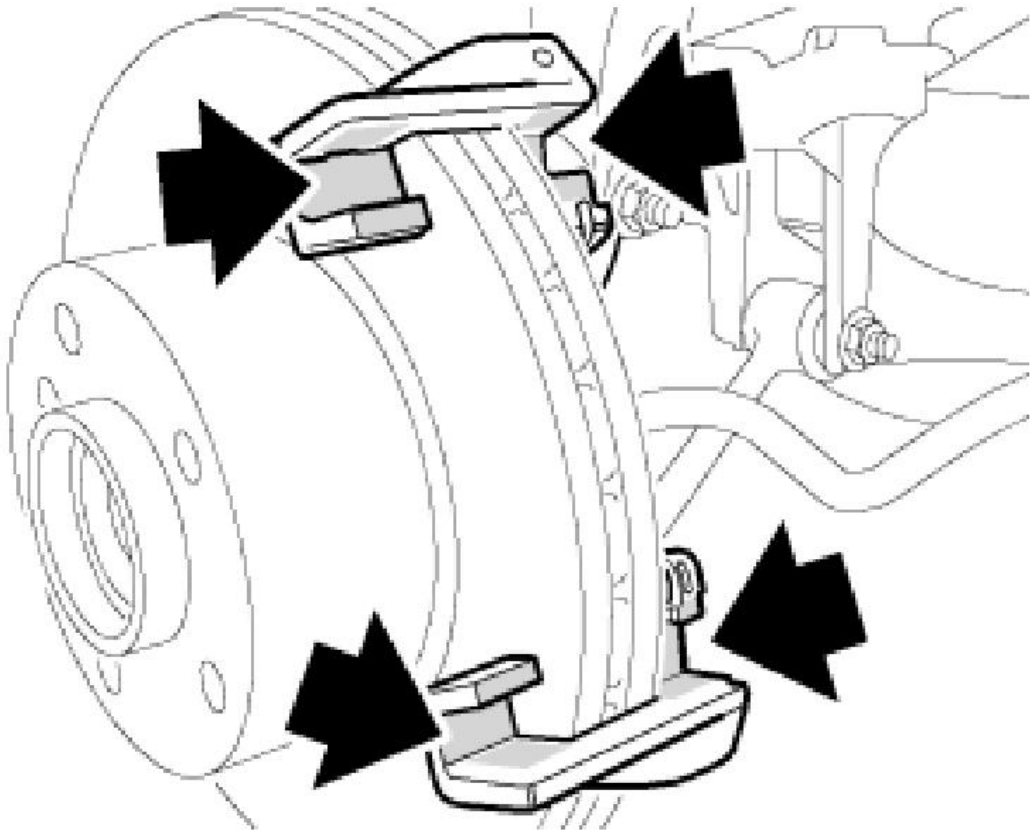

Fig. 44: Locating Mounting Bracket Hammer Head Guides
Courtesy of BMW OF NORTH AMERICA, INC.

Installation:

Make sure that the brake pad is fitted correctly in piston groove (1).

(The dust sleeve was removed only to clearly show all components.)

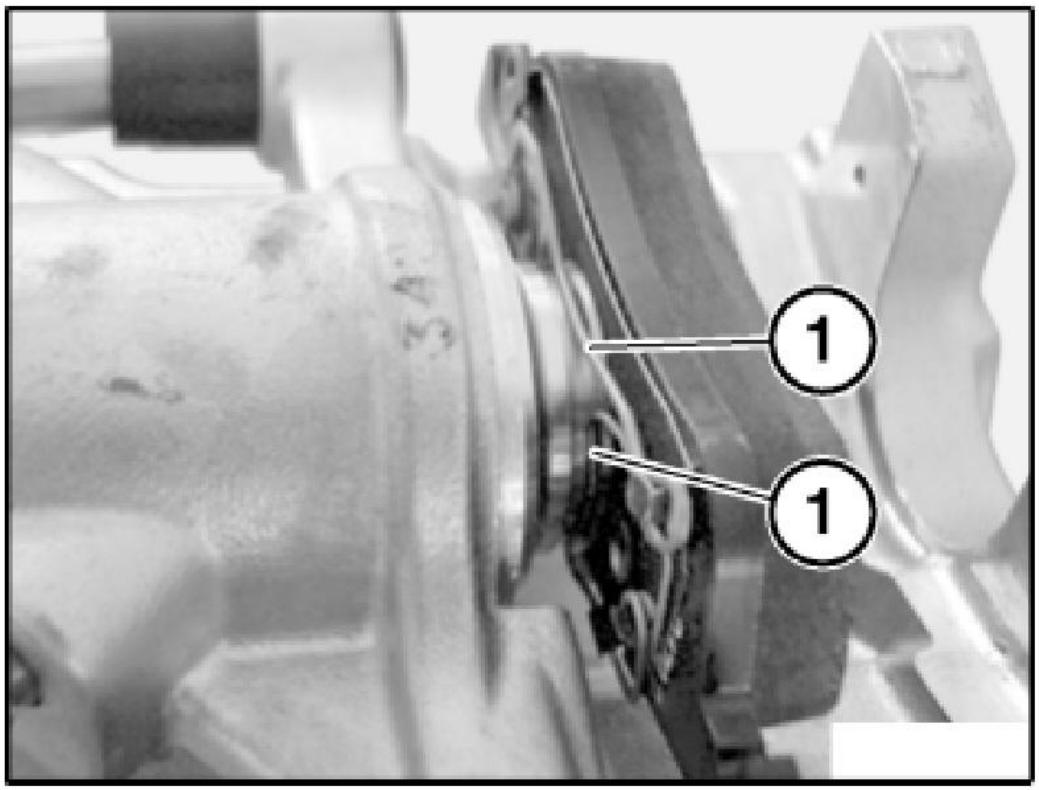

G03306459

Fig. 45: View Of Brake Pad In Piston Groove
Courtesy of BMW OF NORTH AMERICA, INC.

34 21 295 REPLACING DUST SLEEVE ON REAR LEFT OR RIGHT BRAKE CALIPER

NOTE: **For Special Tool identification, see BRAKES - SPECIAL TOOLS - COOPER (1.6L) R50/W10 .**

Special Tools Required:

- 34 6 303
- 34 6 304
- 34 6 305

Necessary Preliminary Tasks:

- Remove rear brake pads. Refer to **34 21 200 REMOVING AND INSTALLING OR REPLACING**

BRAKE LININGS ON BOTH REAR DISK BRAKES.

Remove existing dust sleeve.

Arrange inner lip of new dust sleeve in position (1) on piston.

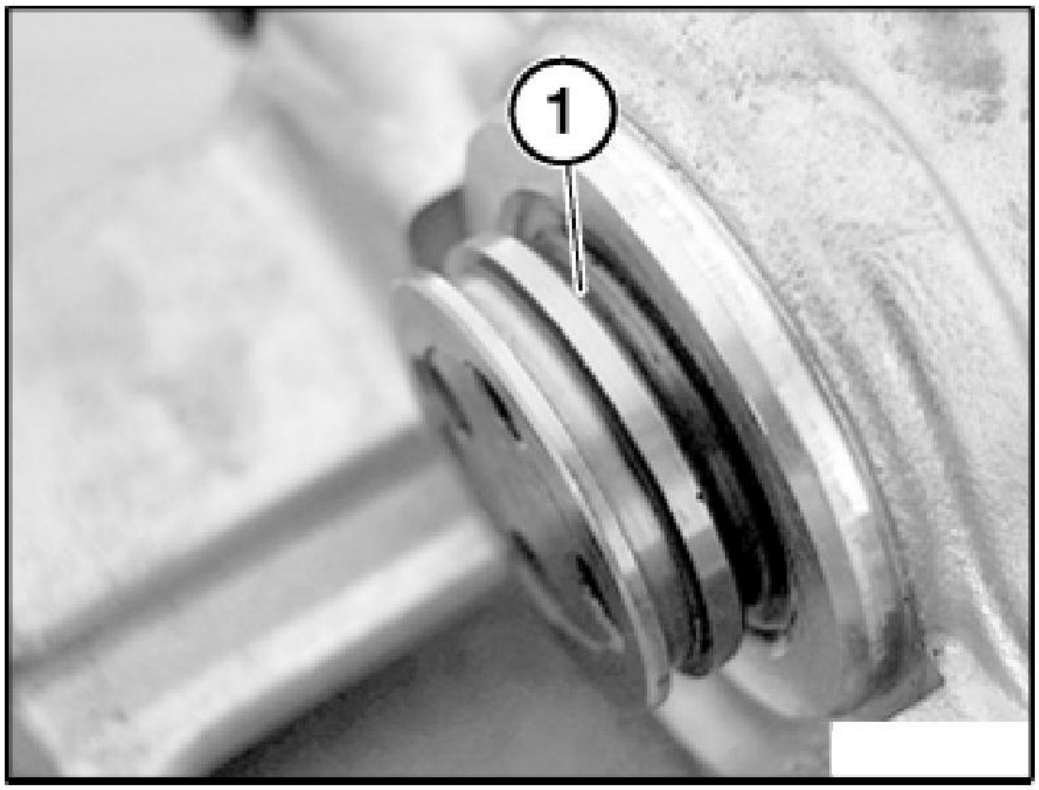

G03306460

Fig. 46: View Of Inner Lip Of Dust Sleeve On Piston
Courtesy of BMW OF NORTH AMERICA, INC.

Use special tools 34 6 303 / 34 6 304 / 34 6 305 to arrange outer lip of new dust sleeve in position.

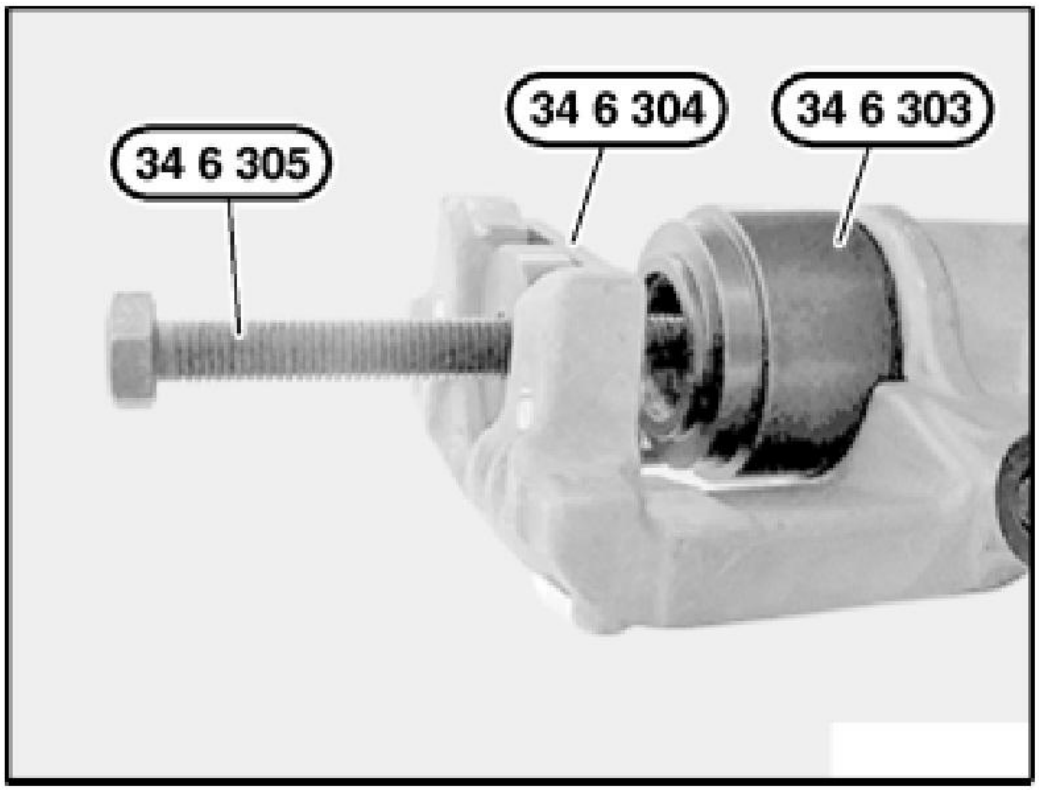

G03306461

Fig. 47: Aligning Outer Lip Of Dust Sleeve Using Brake Piston Tool
Courtesy of BMW OF NORTH AMERICA, INC.

34 21 320 REMOVING AND INSTALLING/REPLACING BOTH BRAKE DISKS

Necessary Preliminary Tasks:

- Remove rear wheels. Refer to **36 10 300 REMOVING OR INSTALLING FRONT OR REAR WHEEL** .
- Remove rear brake pads. Refer to **34 21 200 REMOVING AND INSTALLING OR REPLACING BRAKE LININGS ON BOTH REAR DISK BRAKES**.

IMPORTANT: If the thickness of the brake disks drops below the minimum brake disk thickness (MIN TH), then the brake disks must be replaced. Refer to BRAKES - TECHNICAL DATA - COOPER (1.6L) R50/W10 . Always replace brake discs in pairs. New brake pads must always be fitted when replacing the brake discs.

Release screws (1) and remove brake anchor plate.

Installation:

Tightening torque, (65 N.m.).

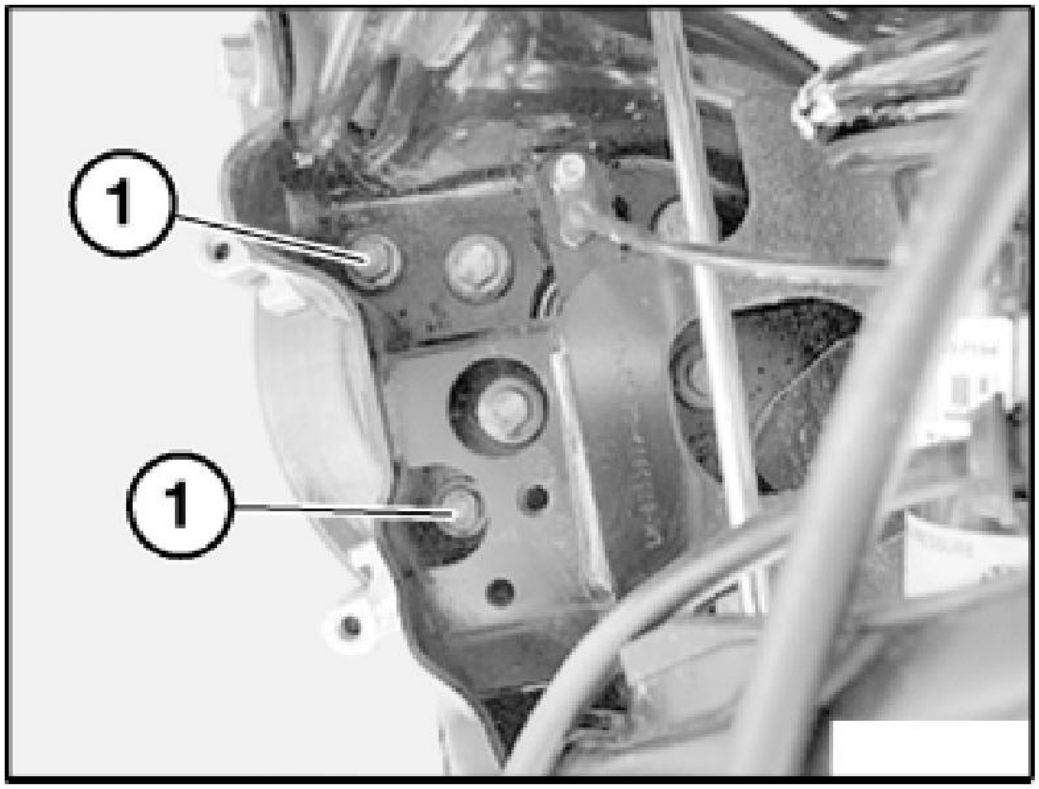

G03306462

Fig. 48: Locating Brake Anchor Plate Retaining Screws
Courtesy of BMW OF NORTH AMERICA, INC.

Release retaining screw and remove brake disk.

Installation:

Replace screw. Tightening torque, (27 N.m.).

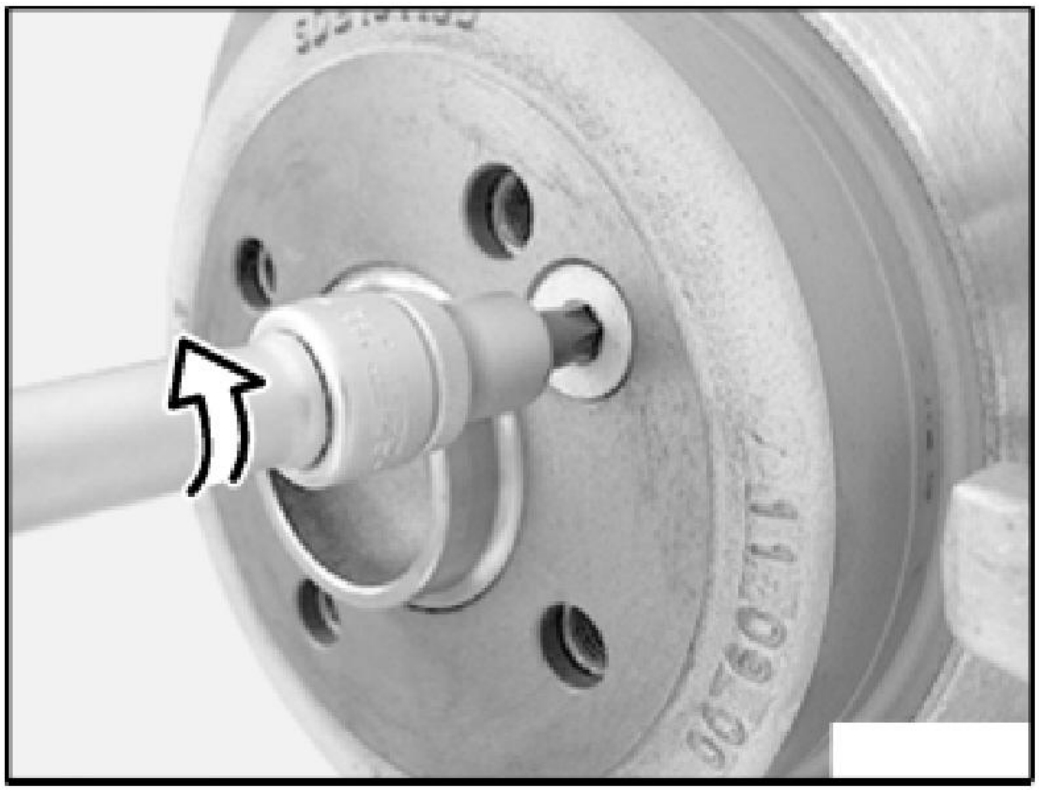

G03306463

Fig. 49: Removing Brake Disk
Courtesy of BMW OF NORTH AMERICA, INC.

34 21 745 REMOVING AND INSTALLING/REPLACING LEFT OR RIGHT REAR BRAKE CALIPER

Necessary Preliminary Tasks:

- Remove rear wheels. Refer to **36 10 300 REMOVING OR INSTALLING FRONT OR REAR WHEEL** .
- Slacken parking brake Bowden cable on handbrake lever.

After completing work:

- Bleed braking system. Refer to **34 00 048 BLEEDING BRAKE SYSTEM WITH ABS/ASC+T**.
- Adjust parking brake. Refer to **34 10 014 ADJUSTING HANDBRAKE**.

Detach retaining spring (1).

Installation:

Attach retaining spring first at bottom and then at top.

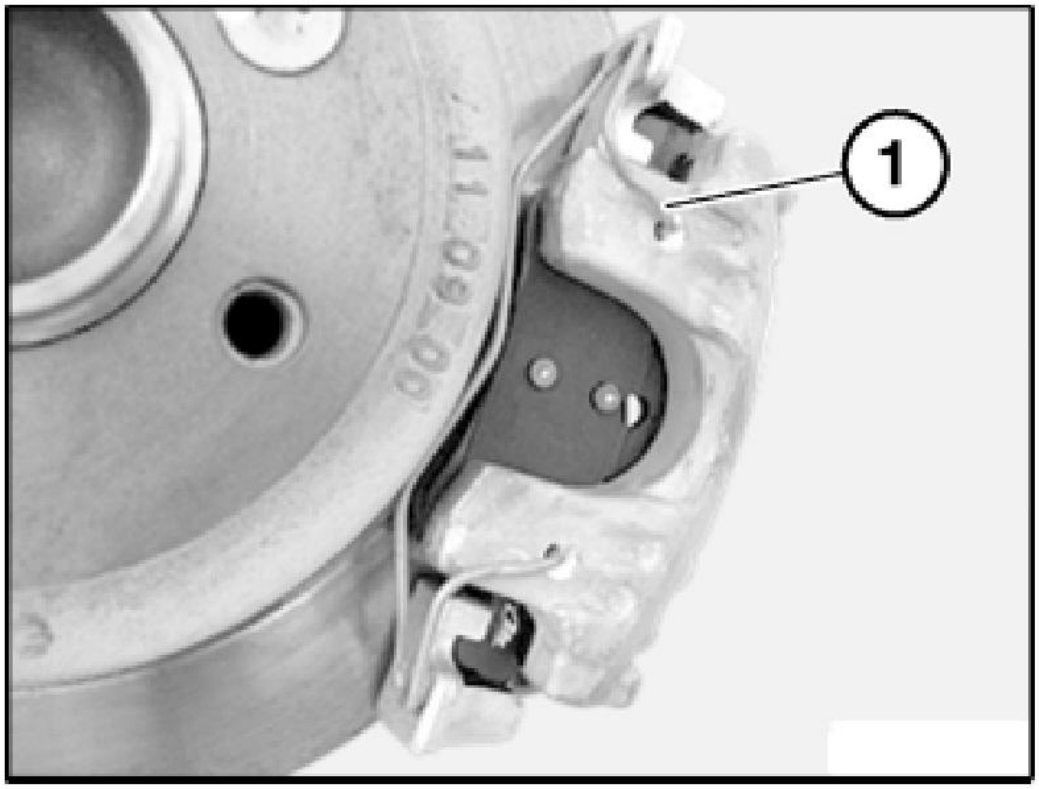

G03306464

Fig. 50: View Of Retaining Spring
Courtesy of BMW OF NORTH AMERICA, INC.

Remove plastic plugs (2).

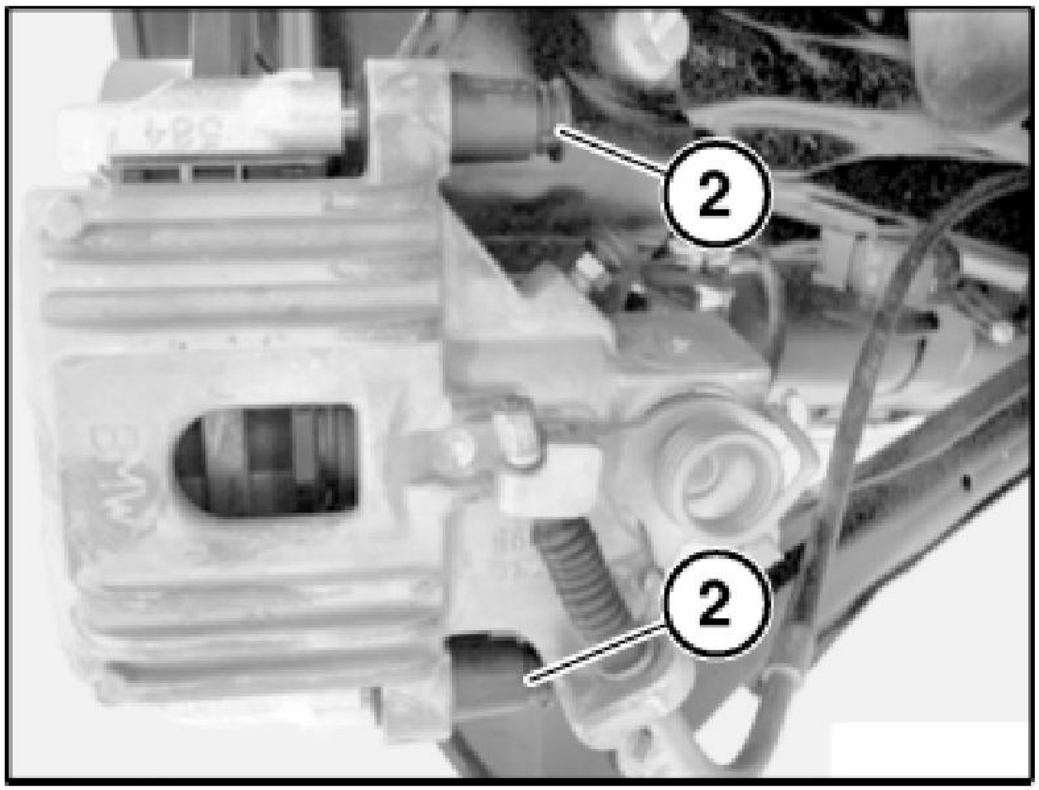

G03306465

Fig. 51: Identifying Plastic Plugs
Courtesy of BMW OF NORTH AMERICA, INC.

Disconnect parking brake Bowden cable (1) from brake caliper. Release banjo bolt (2) and detach brake hose (3) from brake caliper.

Installation:

Replace sealing rings. Tightening torque, (48 +/- 2 N.m.).

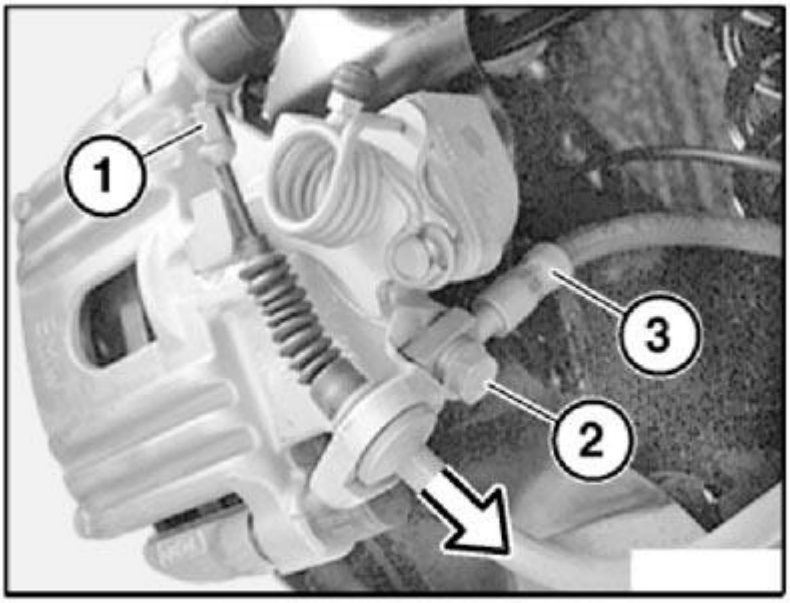

G03306466

Fig. 52: Locating Banjo Bolt And Brake Hose From Brake Caliper
Courtesy of BMW OF NORTH AMERICA, INC.

Release guide screws (2) and remove brake caliper towards rear.

Installation:

Tightening torque, (32-38 N.m.).

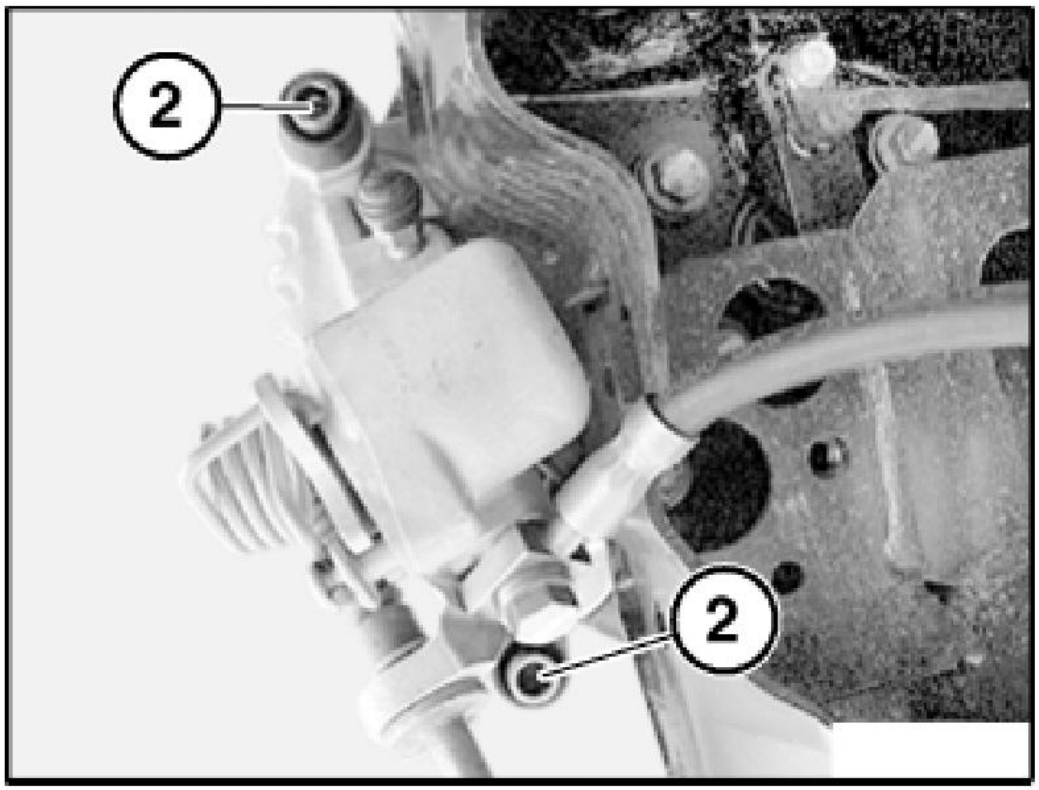

G03306467

Fig. 53: Releasing Guide Screws And Removing Brake Caliper
Courtesy of BMW OF NORTH AMERICA, INC.

MASTER BRAKE CYLINDER

34 31 181 REPLACING EXPANSION TANK FOR HYDRAULIC BRAKE ACTUATION

NOTE: **Read and comply with General Information. Refer to 34 00 ... GENERAL INFORMATION. Draw brake fluid out of expansion tank using a suction bottle. Use a suction bottle used exclusively for drawing off brake fluid. Do not reuse drawn out brake fluid.**

Remove seal (1).

Press release tabs on left and right in direction of arrow and remove cover.

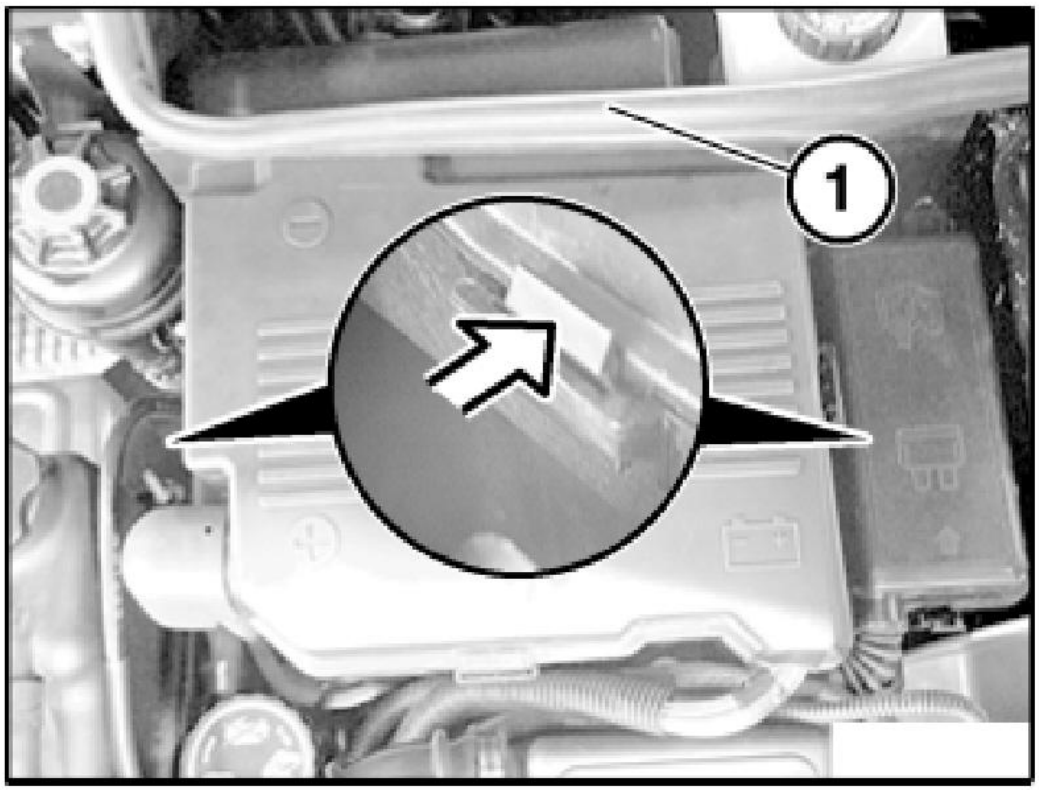

G03306468

Fig. 54: Locating Tabs On Cover
Courtesy of BMW OF NORTH AMERICA, INC.

Disconnect plug connection (1).

Detach feed hose (2) for clutch hydraulics.

NOTE: **The supply hose must be secured in the vertical position so that no fluid can emerge.**

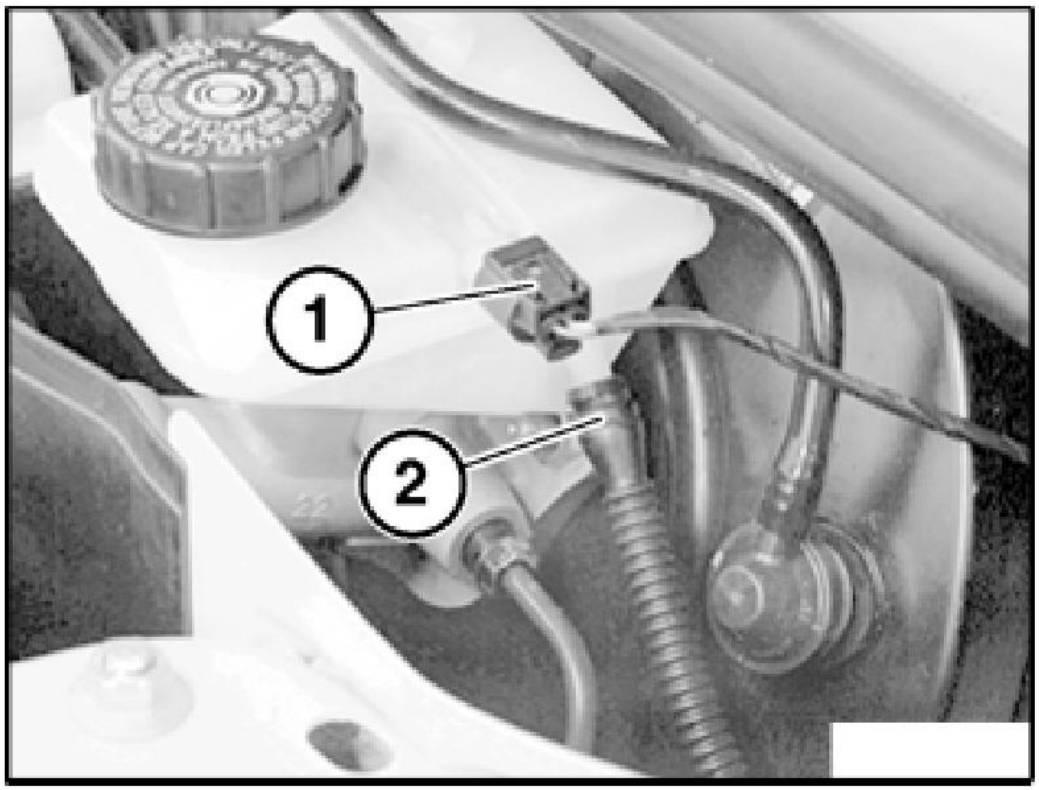

G03306469

Fig. 55: Disconnecting Plug Connection
Courtesy of BMW OF NORTH AMERICA, INC.

Unclip vacuum hose for brake booster at top of expansion tank.

Release screw (1).

Installation:

Tightening torque, (3.5 N.m.).

Lift expansion tank vertically from brake master cylinder.

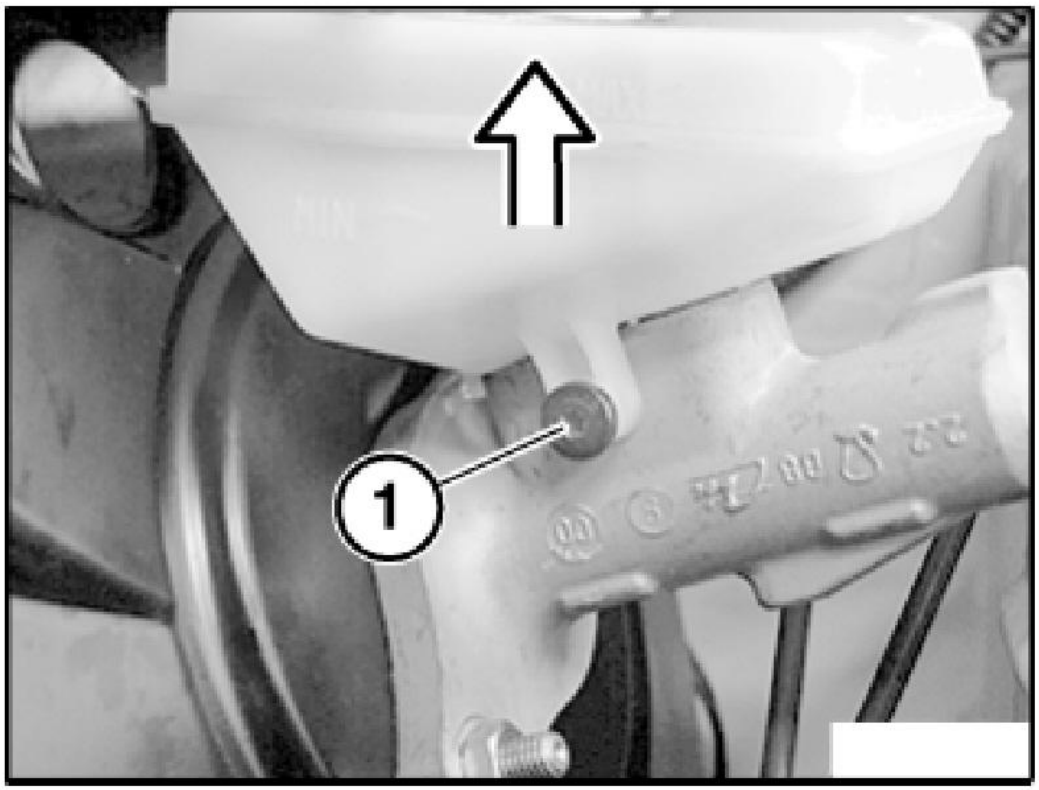

G03306470

Fig. 56: Locating Expansion Tank Retaining Screw
Courtesy of BMW OF NORTH AMERICA, INC.

Installation:

Check o-rings (1) and replace if necessary. Push the expansion tank vertically onto the master brake cylinder.

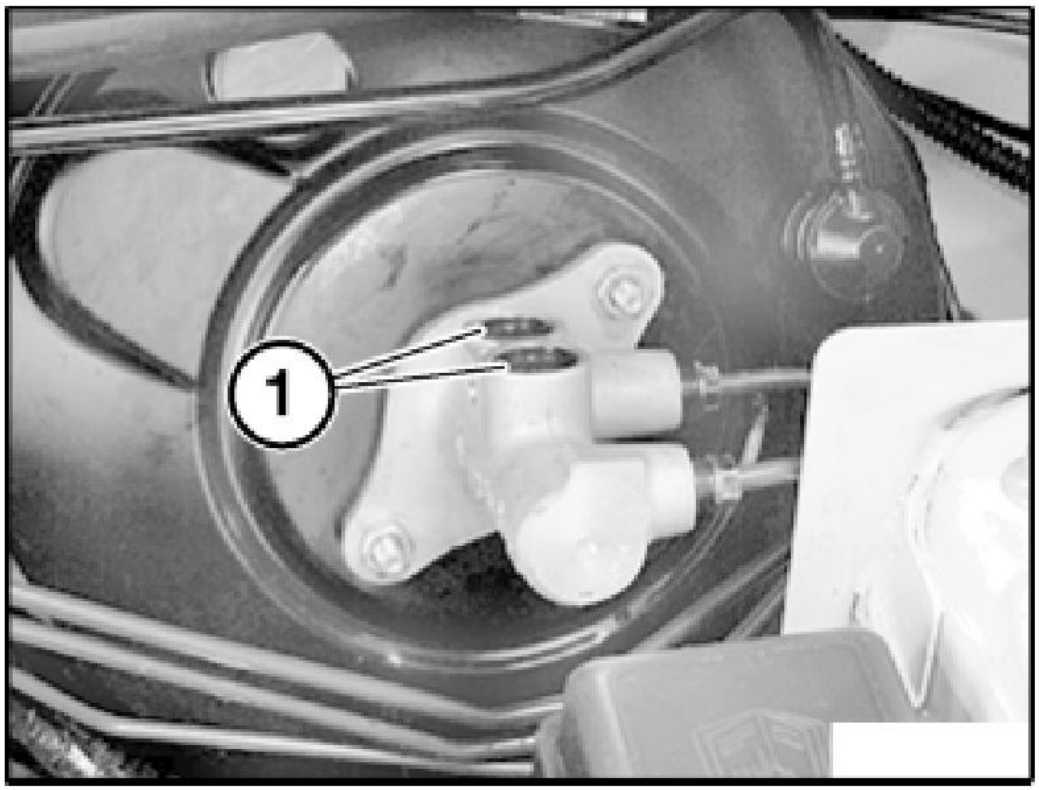

G03306471

Fig. 57: Identifying O-Rings
Courtesy of BMW OF NORTH AMERICA, INC.

34 31 500 REMOVING AND INSTALLING/REPLACING BRAKE MASTER CYLINDER

Necessary Preliminary Tasks:

- General Information. Refer to **34 00 ... GENERAL INFORMATION**.
- Remove intake filter housing (R53).
- Remove battery box (R50). Refer to **61 21 100 REMOVING AND INSTALLING/REPLACING BATTERY CONTAINER** .
- Remove right partition.
- Remove expansion tank. Refer to **34 31 181 REPLACING EXPANSION TANK FOR HYDRAULIC BRAKE ACTUATION**.

After completing tasks, bleed brake system. Refer to **34 00 048 BLEEDING BRAKE SYSTEM WITH ABS/ASC+T**.

Unfasten brake lines (1).

Installation:

Tightening torque, (14 N.m.).

Release nuts (2) and withdraw brake master cylinder from brake booster.

Installation:

Replace self-locking nuts.

Tightening torque, (21 =/- 3 N.m.).

NOTE: For vehicles with DSC: Disconnect plug connection for pressure sensor.

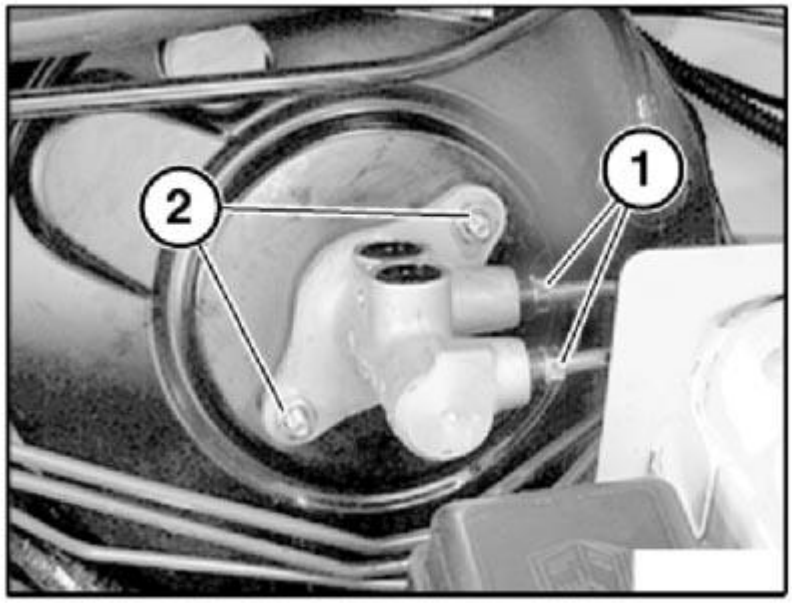

G03306472

Fig. 58: Locating Brake Lines
Courtesy of BMW OF NORTH AMERICA, INC.

Installation:

Replace o-ring (1) and (2).

When brake master cylinder:

If the brake master cylinder is replaced in vehicles with DSC, the pressure sensor must be modified.

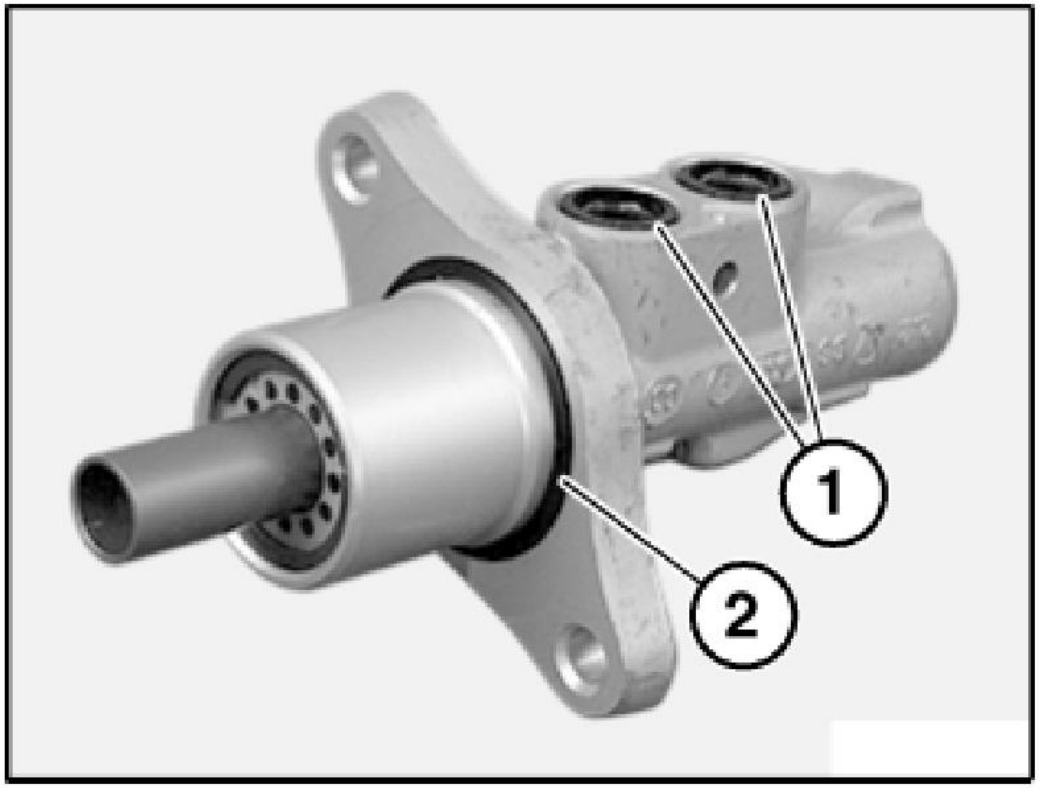

G03306473

Fig. 59: Identifying O-Rings
Courtesy of BMW OF NORTH AMERICA, INC.

Installation:

When inserting master brake cylinder into brake booster, make sure pressure rod of brake booster and pressure rod of master brake cylinder are in one plane.

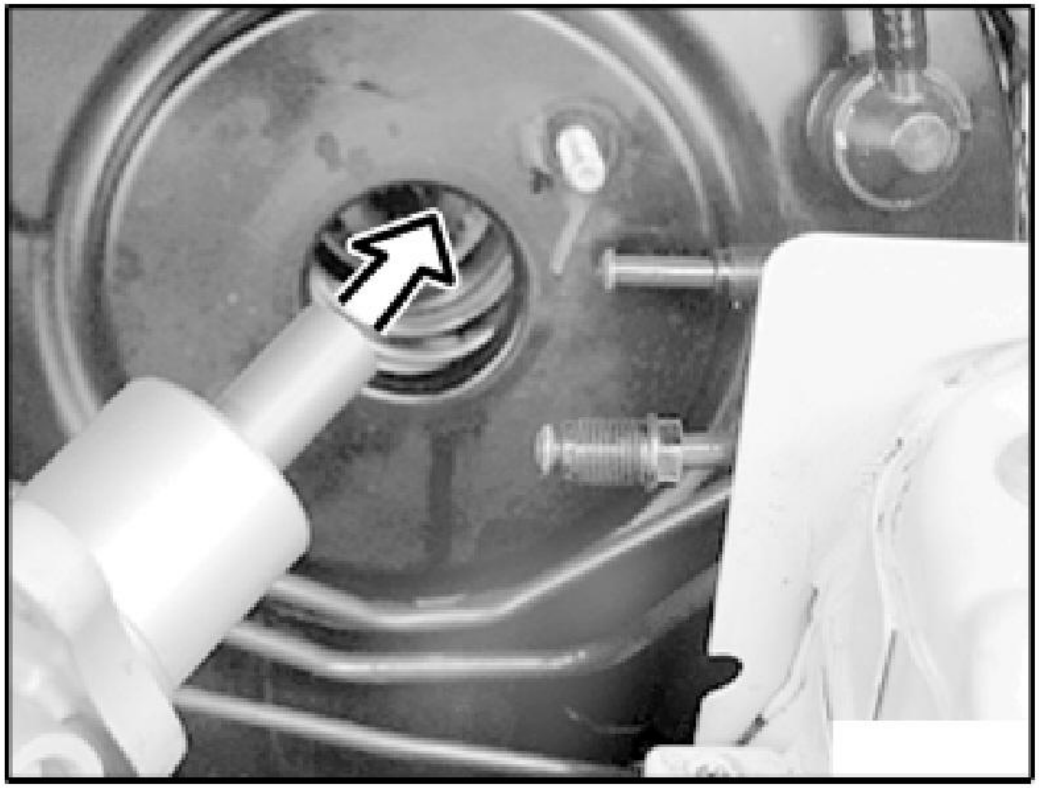

G03306474

Fig. 60: View Of Master Brake Cylinder And Brake Booster
Courtesy of BMW OF NORTH AMERICA, INC.

BRAKES LINES

34 32 881 REPLACING FRONT LEFT OR RIGHT BRAKE HOSES

NOTE: **General Information, refer to 34 00 ... GENERAL INFORMATION. After completing tasks, bleed brake system. Refer to 34 00 048 BLEEDING BRAKE SYSTEM WITH ABS/ASC+T.**

Apply pedal prop and depress brake pedal slightly. This prevents brake fluid from emerging from the expansion tank when the brake lines are opened.

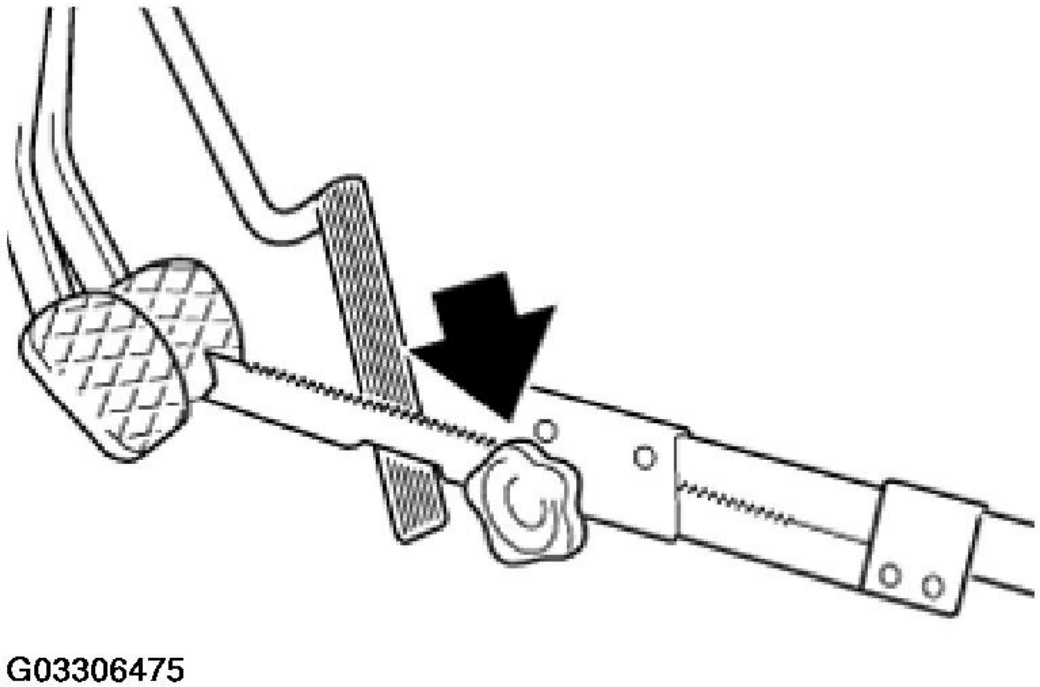

Fig. 61: Securing Brake Pedal Using Pedal Prop
Courtesy of BMW OF NORTH AMERICA, INC.

Disconnect brake hose (1) from brake line.

IMPORTANT: Grip brake hose (1) at hexagon to prevent connecting piece from turning in retaining bracket.

Installation:

Tightening torque, (14 N.m.).

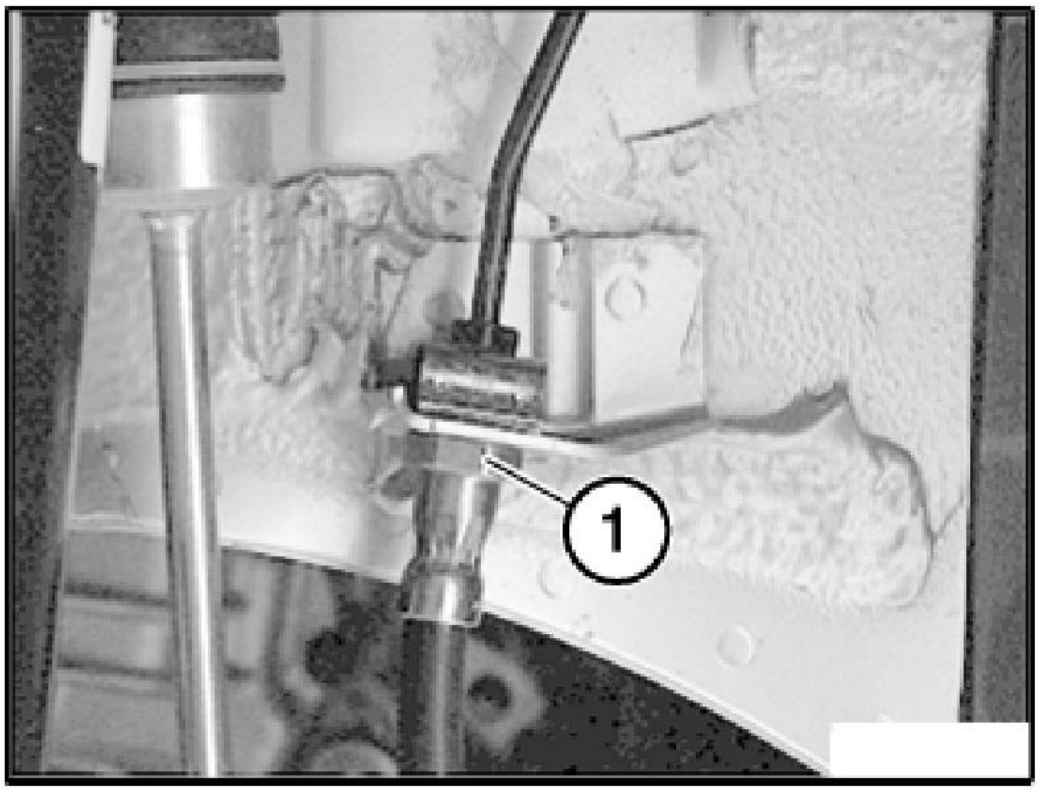

G03306476

Fig. 62: Identifying Brake Hose And Brake Line
Courtesy of BMW OF NORTH AMERICA, INC.

Pull brake hose out of retaining fixture on shock absorber.

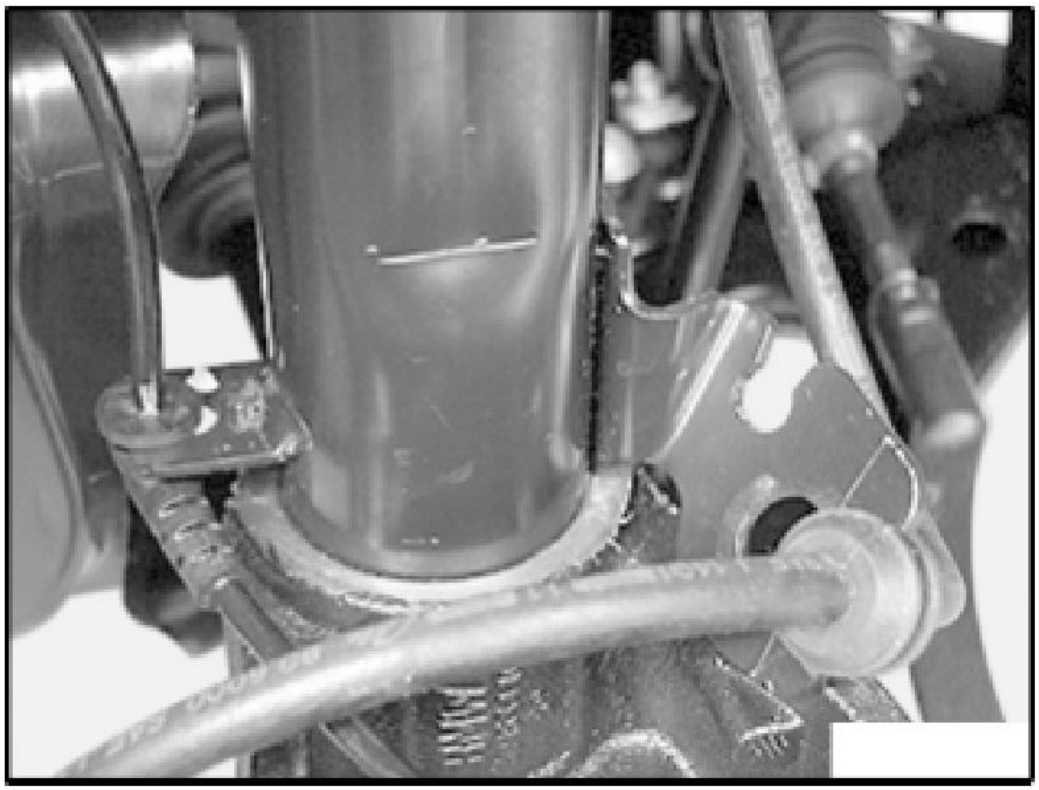

G03306477

Fig. 63: Removing Brake Hose From Retaining Fixture On Shock Absorber
Courtesy of BMW OF NORTH AMERICA, INC.

Release banjo bolt (2) and detach brake hose (1) from brake caliper.

Installation:

Tightening torque, (40 N.m.).

Replace sealing rings.

Mount and tighten brake hose on brake caliper first, then on brake line/brake hose point of connection.

IMPORTANT: Never twist brake hose when installing it and avoid all contact with parts attached rigidly to the body.

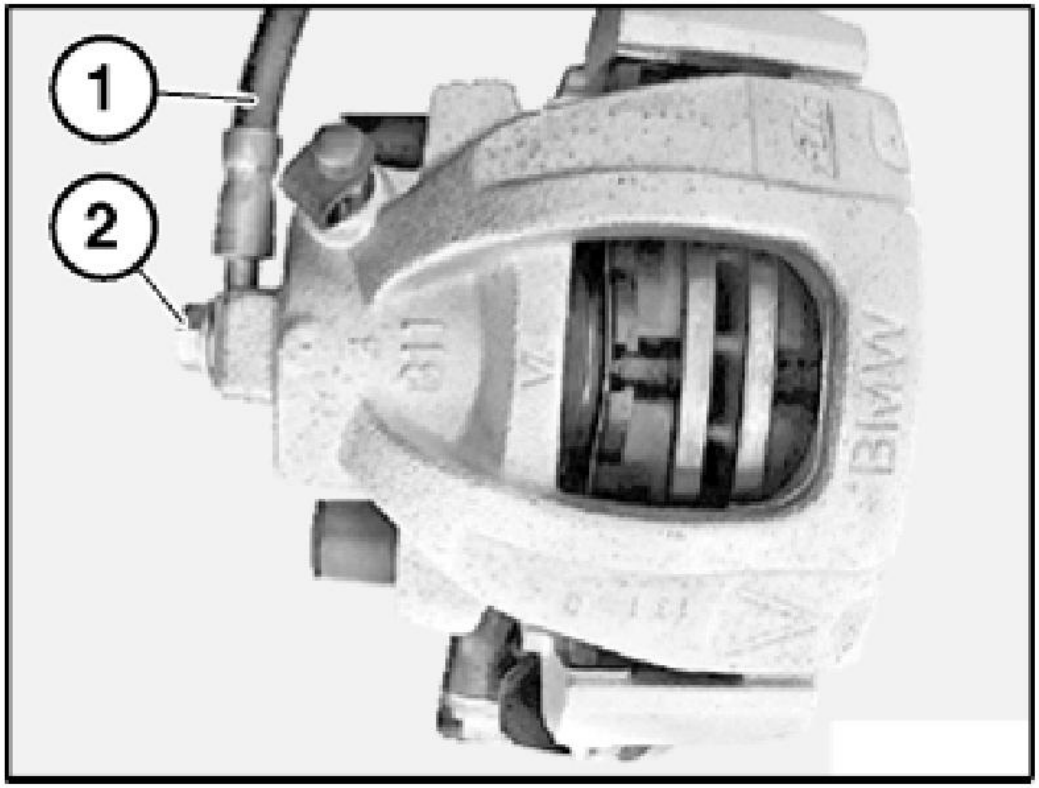

G03306478

Fig. 64: View Of Banjo Bolt And Brake Hose
Courtesy of BMW OF NORTH AMERICA, INC.

34 32 980 REPLACING REAR LEFT OR RIGHT BRAKE HOSES

NOTE: Read and comply with General Information. Refer to 34 00 ... GENERAL INFORMATION. After completing tasks, bleed brake system. Refer to 34 00 048 BLEEDING BRAKE SYSTEM WITH ABS/ASC+T.

Apply pedal prop and depress brake pedal slightly. This prevents brake fluid from emerging from the expansion tank and air from entering the system when the brake lines are opened.

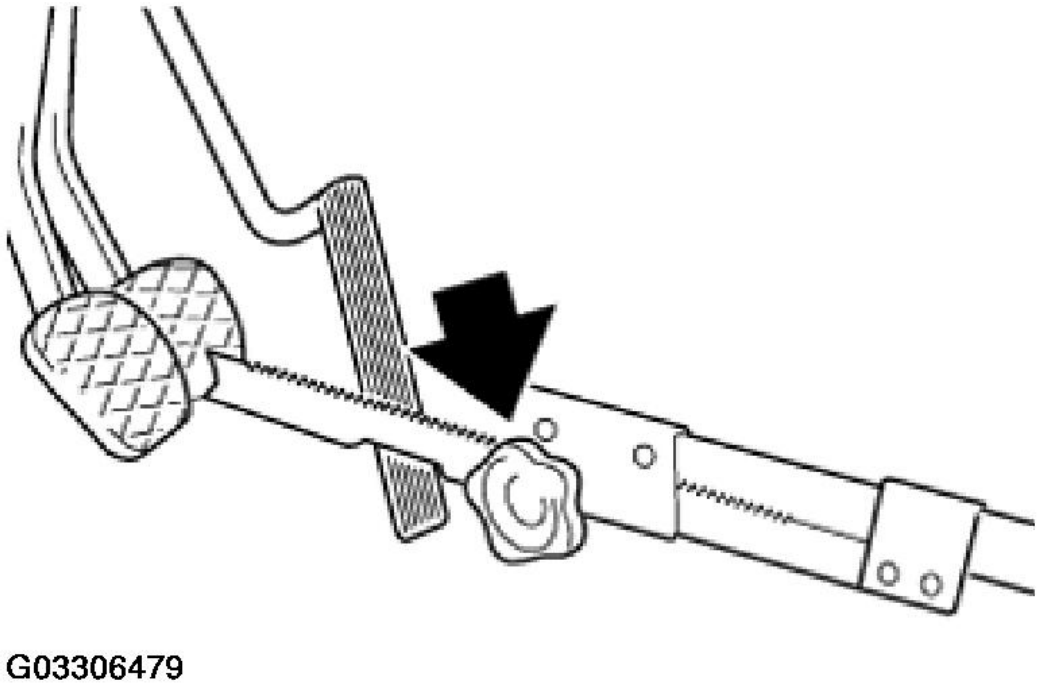

Fig. 65: Securing Brake Pedal Using Pedal Prop
Courtesy of BMW OF NORTH AMERICA, INC.

Detach brake hose (1) from brake line.

IMPORTANT: Grip brake hose (1) at hexagon to prevent connecting piece from turning in retaining bracket.

Installation:

Tightening torque, (14 N.m.).

Mount and tighten brake hose on brake caliper first, then on brake line/brake hose point of connection.

IMPORTANT: Never twist brake hose when installing it and avoid all contact with parts attached rigidly to the body.

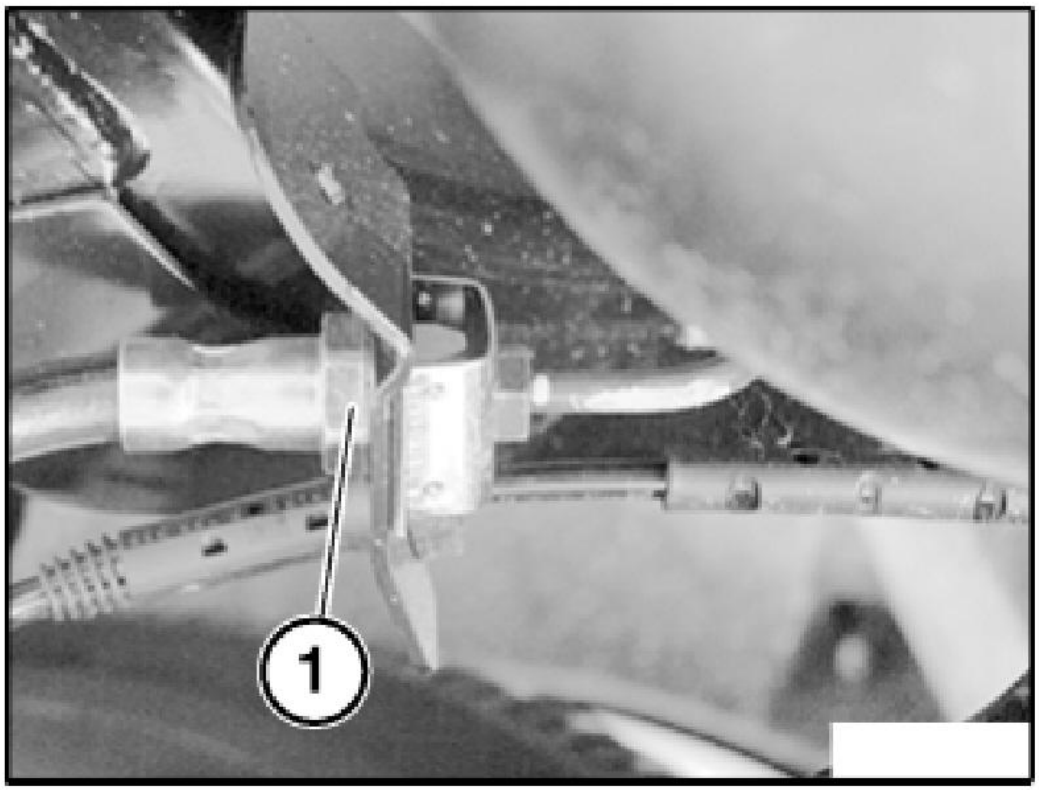

G03306480

Fig. 66: View Of Brake Hose And Brake Line
Courtesy of BMW OF NORTH AMERICA, INC.

Pull brake hose out of retaining fixture (1) on shock absorber.

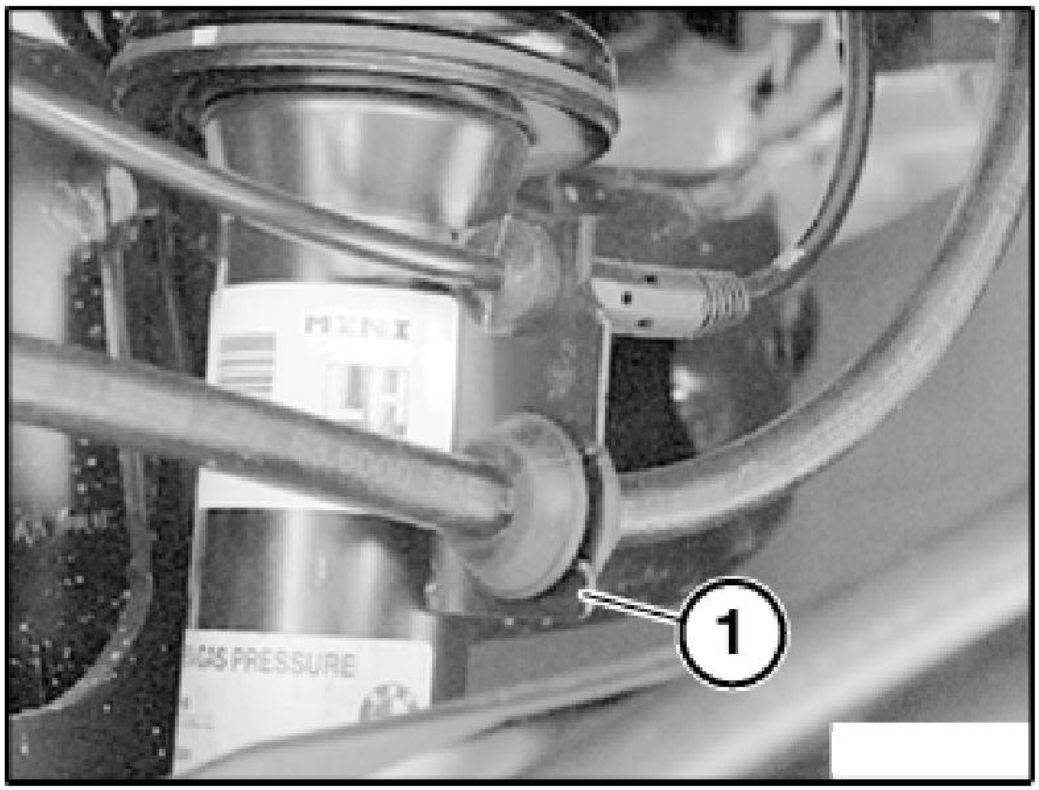

G03306481

Fig. 67: Locating Brake Hose In Retaining Fixture
Courtesy of BMW OF NORTH AMERICA, INC.

Release banjo bolt (1) and detach brake hose from brake caliper.

Installation:

Replace sealing rings. Tightening torque, (48 +/- 2 N.m.).

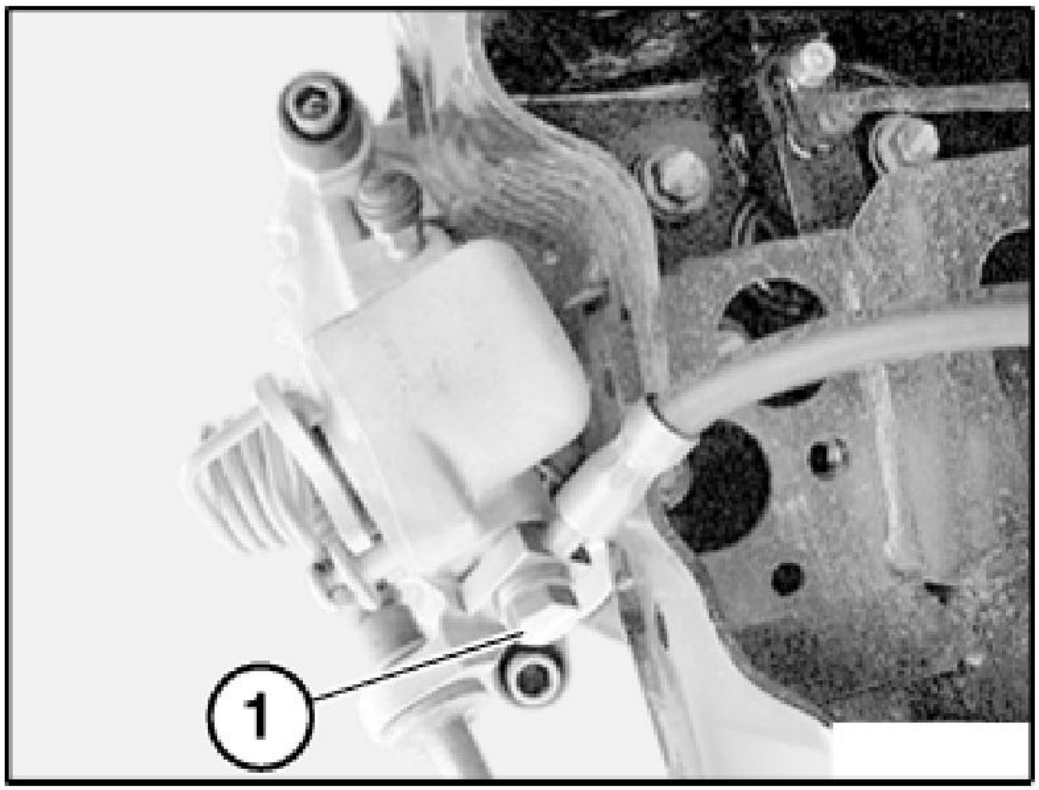

G03306482

Fig. 68: Releasing Banjo Bolt And Detaching Brake Hose From Brake Caliper
Courtesy of BMW OF NORTH AMERICA, INC.

BRAKE BOOSTER

34 00 017 CHECKING BRAKE BOOSTER (LOW-PRESSURE TEST)

Operation is identical to **34 00 017 CHECKING BRAKE BOOSTER (LOW-PRESSURE TEST)**.

34 33 051 REPLACING NON-RETURN VALVE FOR BRAKE BOOSTER

Necessary Preliminary Tasks:

- Remove battery container. Refer to **61 21 100 REMOVING AND INSTALLING/REPLACING BATTERY CONTAINER** .

Before beginning work, fully press the brake pedal several times to reduce the vacuum pressure in the brake booster. This makes it easier to detach the vacuum hose.

The non-return valve and the moulded hose are permanently connected to each other are replaced together as a single unit.

Remove non-return valve from brake booster.

Installation:

Check seal in brake booster and replace if necessary.

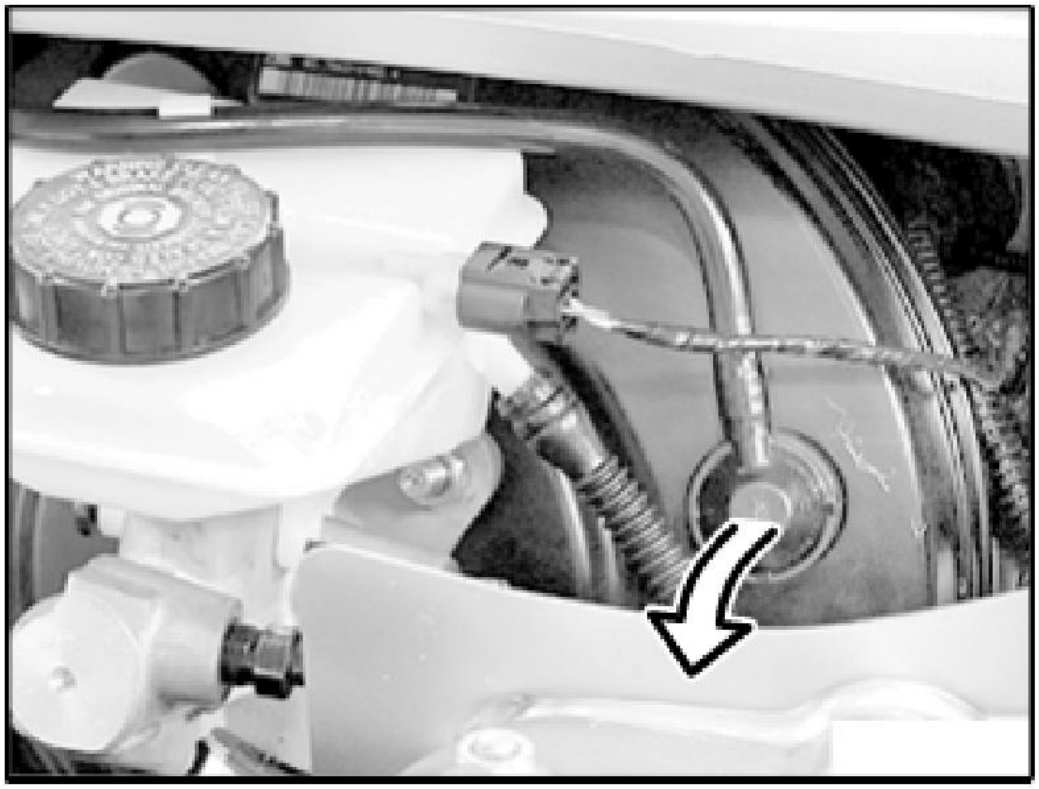

G03306484

Fig. 69: Removing Non-Return Valve From Brake Booster
Courtesy of BMW OF NORTH AMERICA, INC.

Unclip line from holder (1).

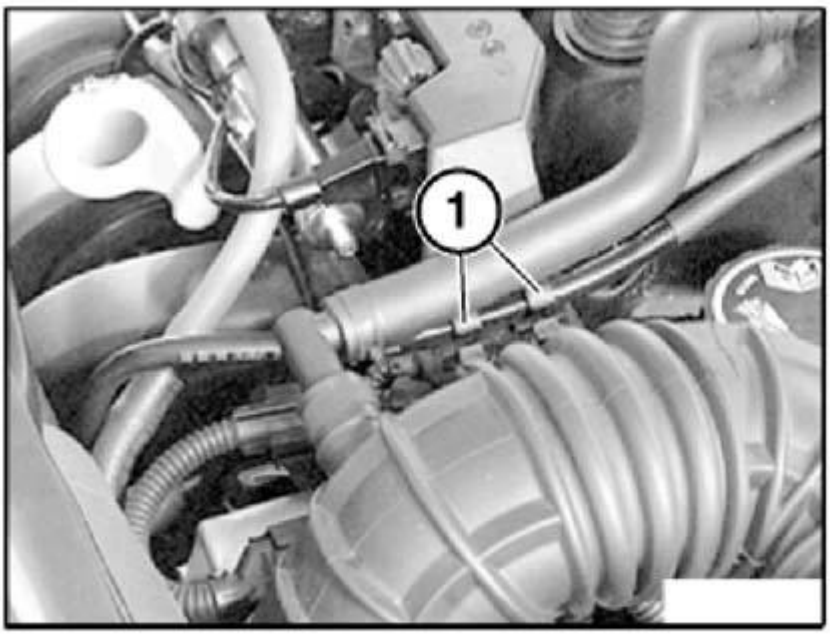

G03306485

Fig. 70: Removing Line From Holder
Courtesy of BMW OF NORTH AMERICA, INC.

Release line from intake manifold and disconnect.

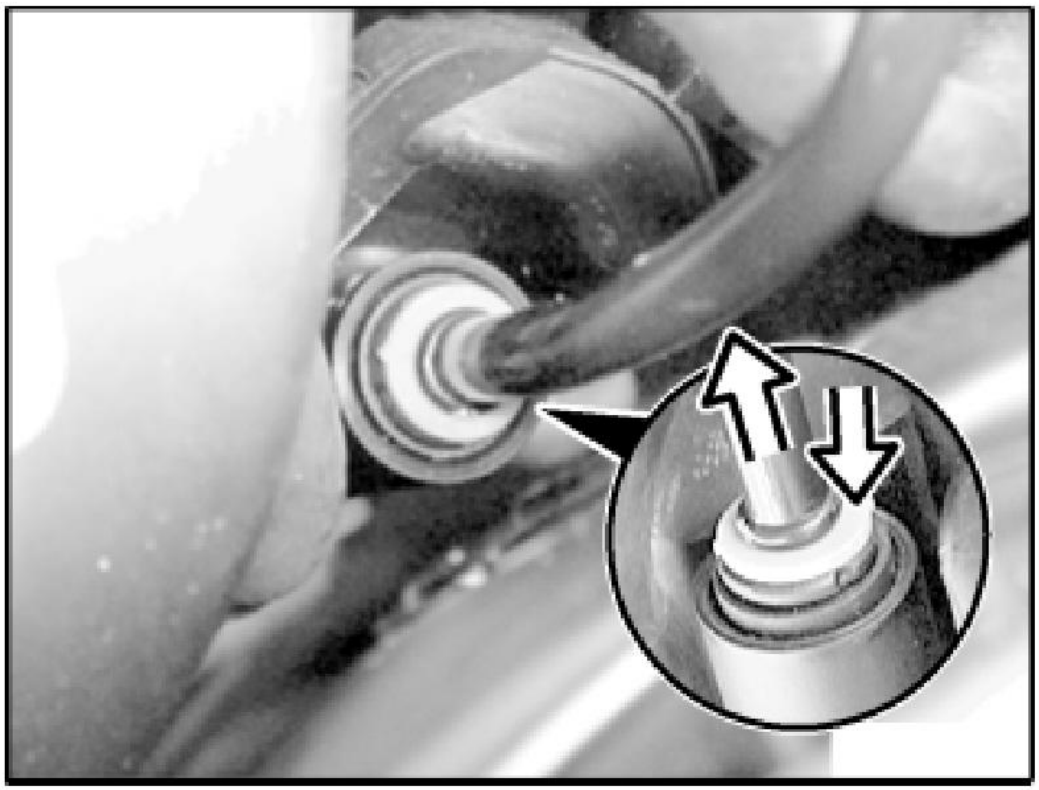

G03306486

Fig. 71: Disconnecting Line From Intake Manifold
Courtesy of BMW OF NORTH AMERICA, INC.

Remove grommet from line.

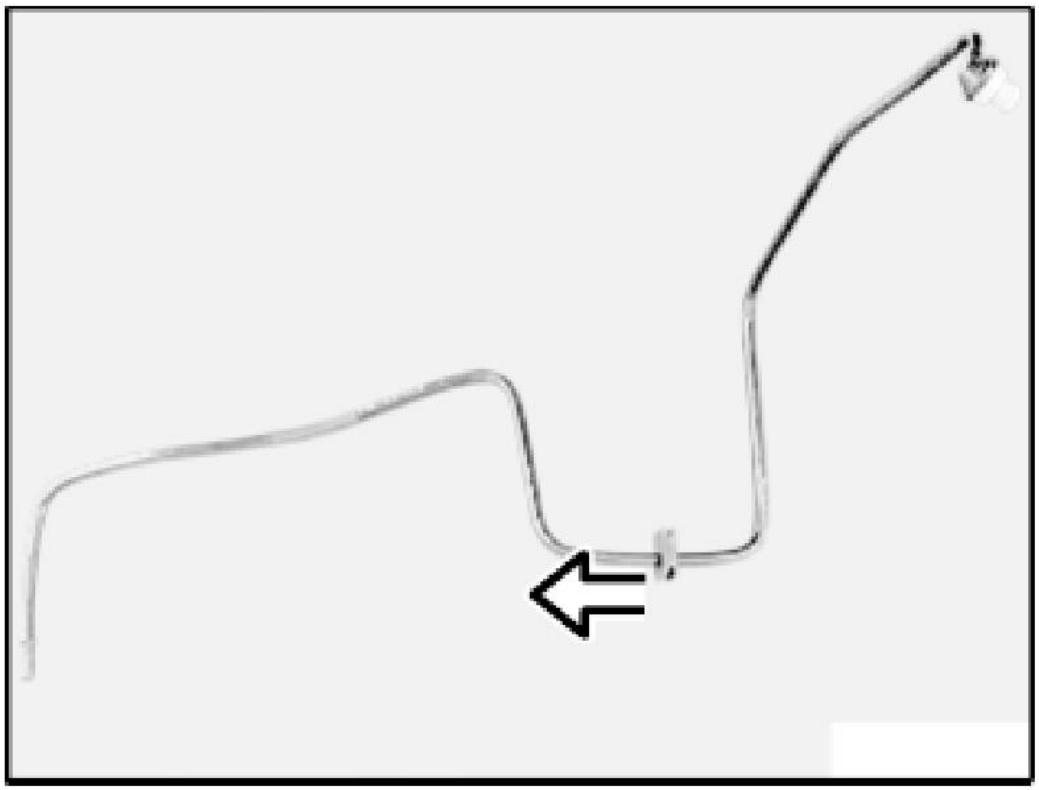

G03306487

Fig. 72: Removing Grommet From Line
Courtesy of BMW OF NORTH AMERICA, INC.

34 33 505 REMOVING AND INSTALLING/REPLACING BRAKE BOOSTER

Necessary Preliminary Tasks:

- Read and comply with General Information. Refer to **34 00 ... GENERAL INFORMATION**.
- Remove brake master cylinder. Refer to **34 31 500 REMOVING AND INSTALLING/REPLACING BRAKE MASTER CYLINDER**
- Remove center console. Refer to **51 16 392 REMOVING AND INSTALLING/REPLACING STORAGE COMPARTMENT IN INSTRUMENT PANEL TRIM (DRIVER'S SIDE)** .
- Remove both windshield wiper arms. Refer to **61 61 081 REMOVING AND INSTALLING/REPLACING WINDSCREEN WIPER ARM** .

After completing tasks, bleed brake system. Refer to **34 00 048 BLEEDING BRAKE SYSTEM WITH ABS/ASC+T** and **34 00 050 BLEEDING BRAKE SYSTEM WITH DSC**.

Remove locking clip (1) and pull out pin (2). Release nuts (3).

Installation:

Tightening torque, (21 +/- 3 N.m.).

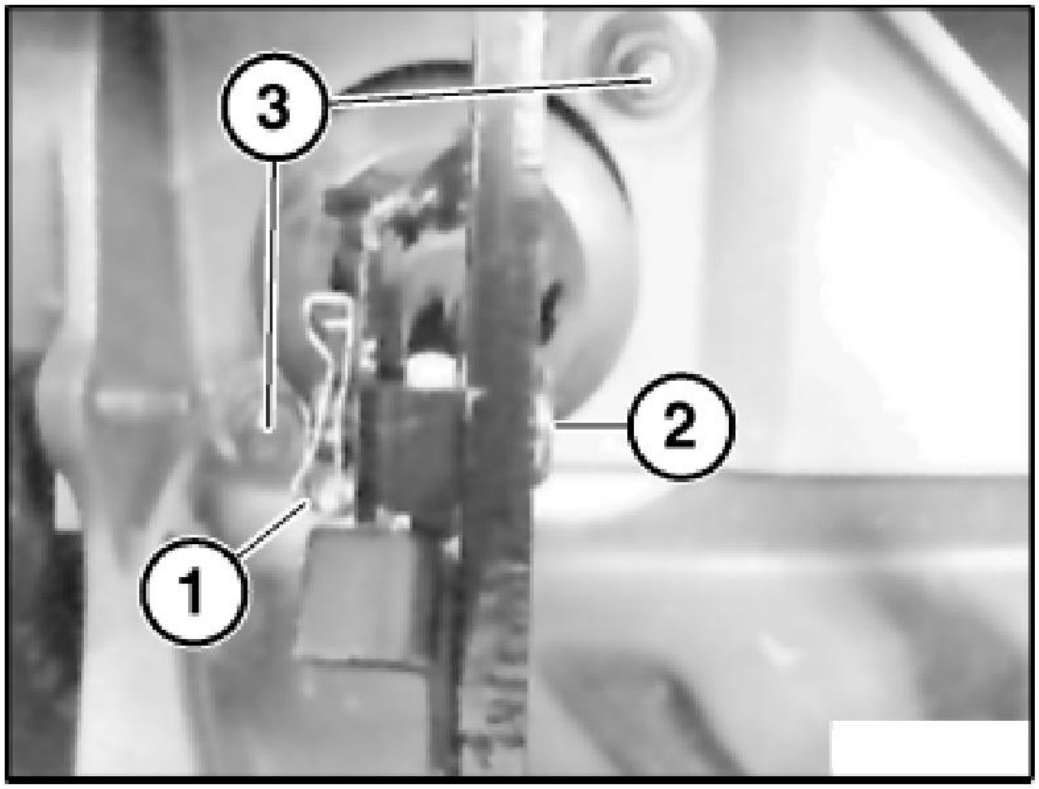

G03306488

Fig. 73: Removing Locking Clip And Pin
Courtesy of BMW OF NORTH AMERICA, INC.

Release nut (1) and remove coolant expansion tank.

Release nuts (2) and remove steering fluid reservoir.

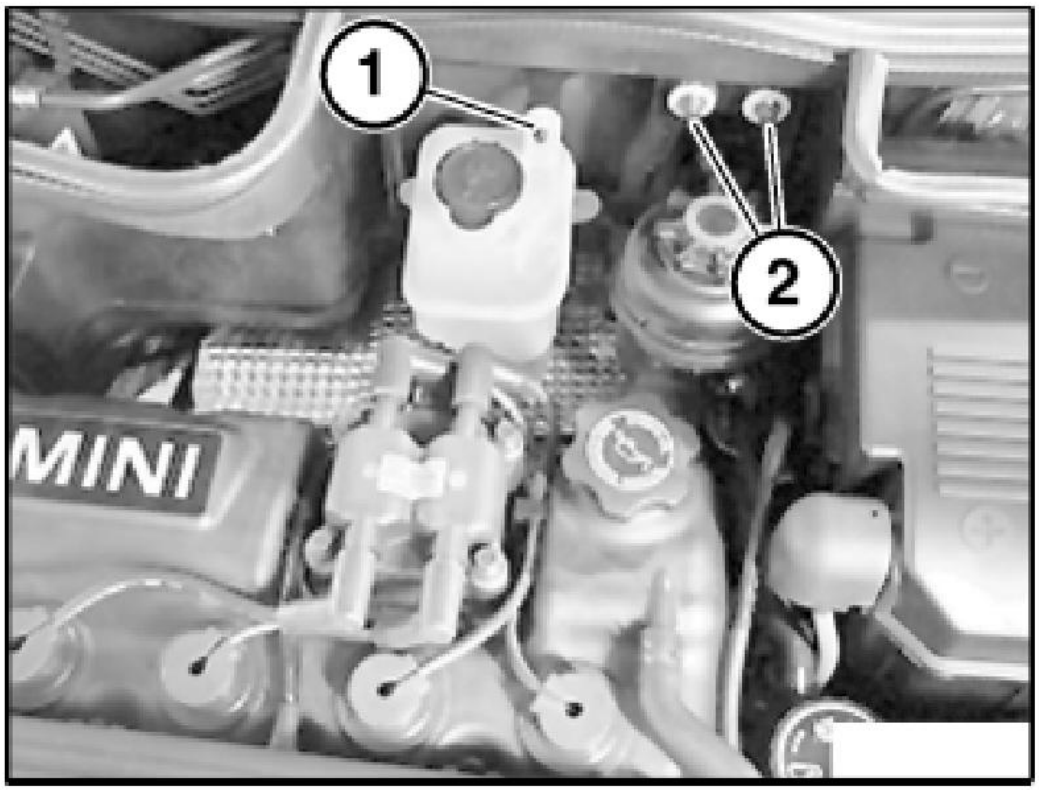

G03306489

Fig. 74: Identifying Coolant Expansion Tank Retaining Nuts
Courtesy of BMW OF NORTH AMERICA, INC.

Unfasten screws (1).

Installation:

Tightening torque, (19 N.m.).

Release nuts (2) and remove bracket.

Installation:

Tightening torque, refer to 51 48 3AZ in **BODY EQUIPMENT - TIGHTENING TORQUES - COOPER (1.6L) R50/W10** .

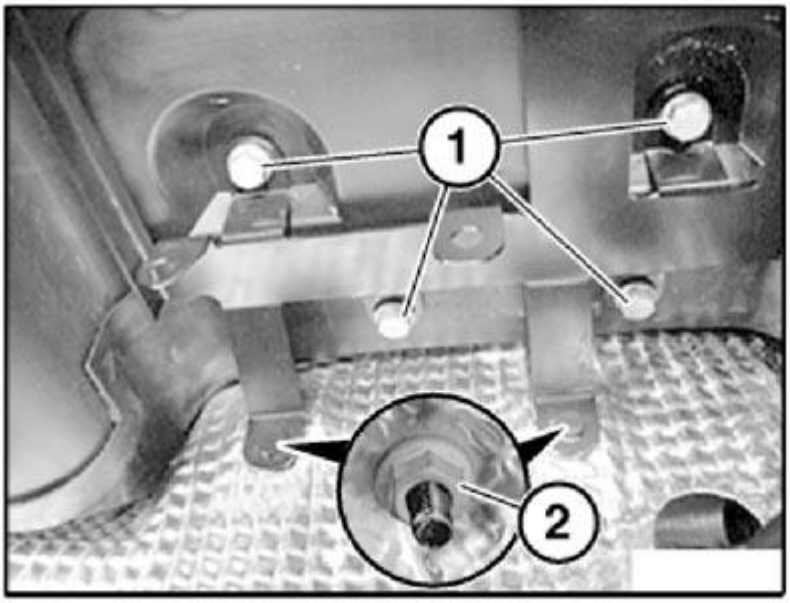

G03306490

Fig. 75: Removing Bracket
Courtesy of BMW OF NORTH AMERICA, INC.

Remove retaining clip (1).

Remove fuel line from retaining clip (2).

Remove engine compartment seal (3) and remove partition wall.

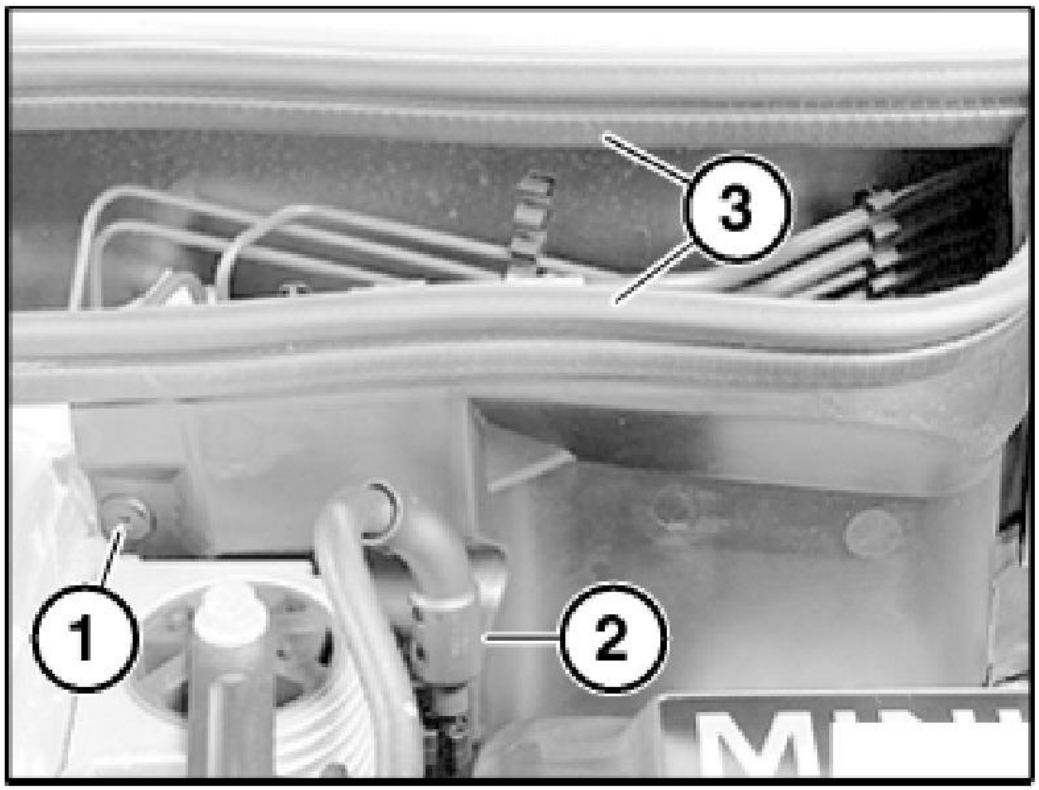

G03306491

Fig. 76: Locating Fuel Line Retaining Clip
Courtesy of BMW OF NORTH AMERICA, INC.

Detach brake lines (1) from hydraulic unit to brake master cylinder.

Tightening torque, (14 N.m.).

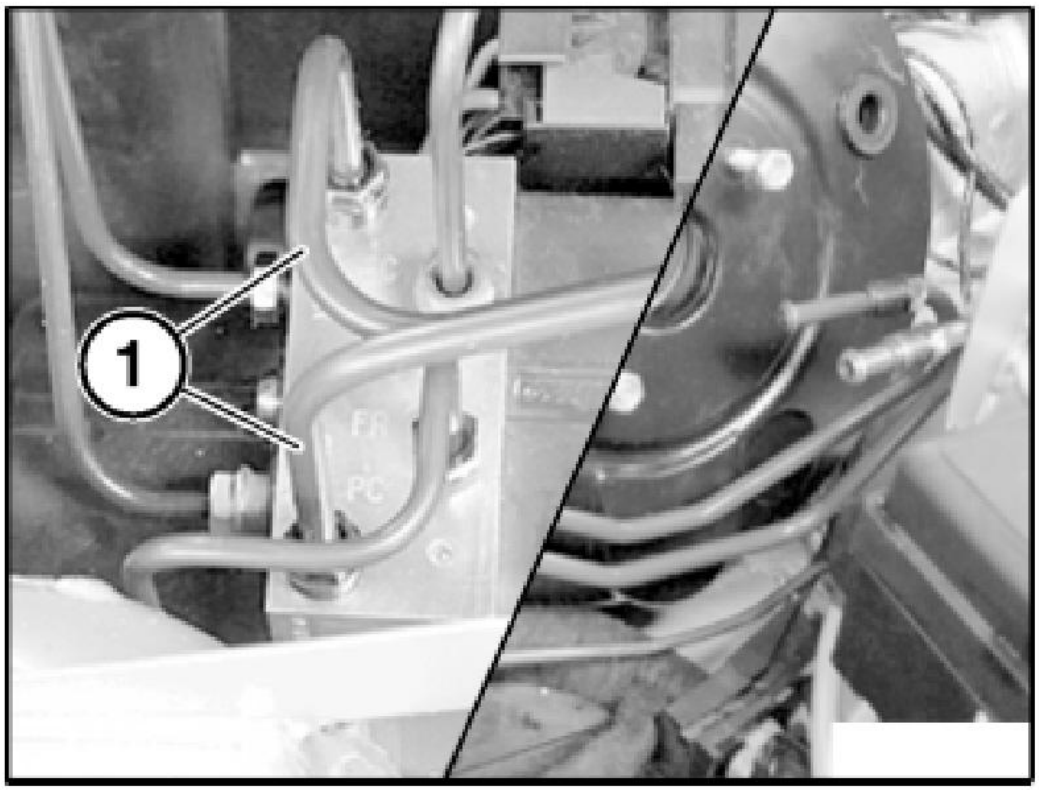

G03306492

Fig. 77: Detaching Brake Lines From Hydraulic Unit To Brake Master Cylinder
Courtesy of BMW OF NORTH AMERICA, INC.

Unfasten screws (1). Release nut (2) and push complete wiper console to one side.

Installation:

Tightening torque, refer to 61 61 2AZ in **GENERAL ELECTRICAL SYSTEM - TIGHTENING TORQUES - COOPER (1.6L) R50/W10** .

Disconnect negative lead (3).

Installation:

Tightening torque, refer to 61 21 4AZ in **GENERAL ELECTRICAL SYSTEM - TIGHTENING TORQUES - COOPER (1.6L) R50/W10** .

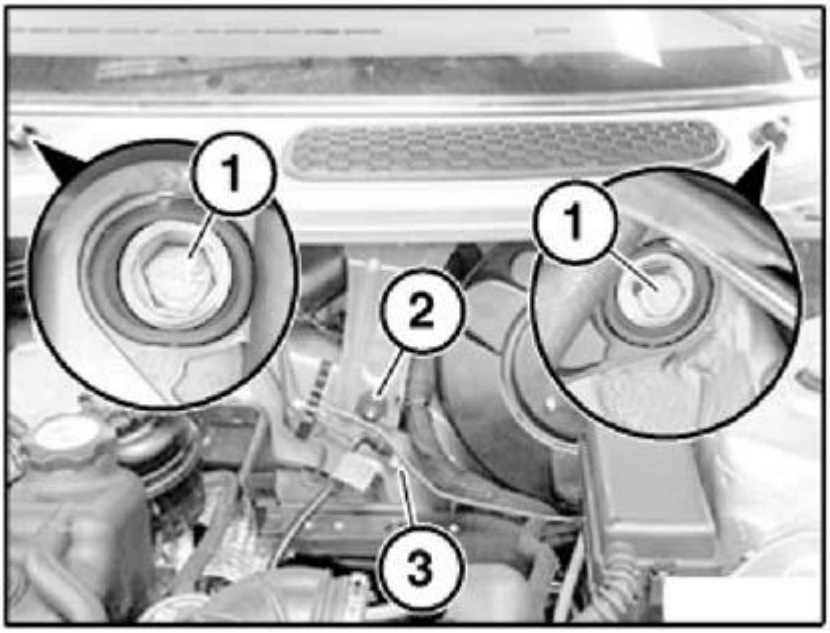

G03306493

Fig. 78: Removing Wiper Console
Courtesy of BMW OF NORTH AMERICA, INC.

Carefully pull brake booster out of bulkhead.

Swivel brake booster upwards and remove.

IMPORTANT: Do not use any force when removing and installing the brake unit; the brake unit can be damaged under certain circumstances.

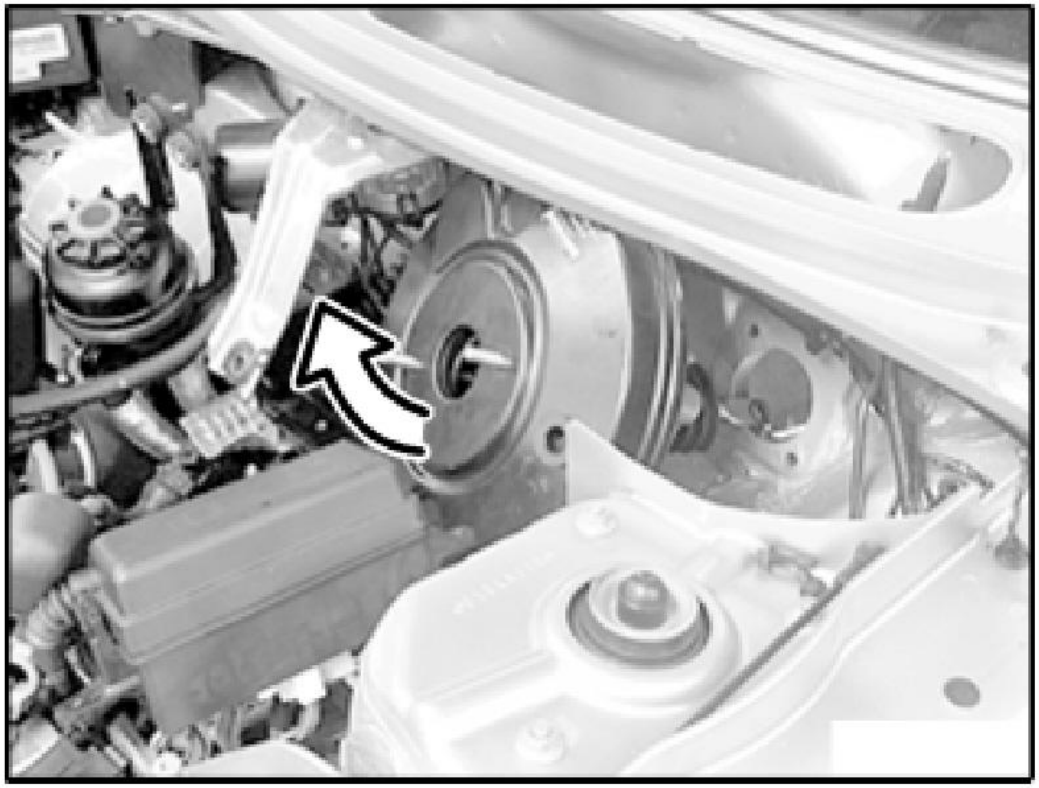

G03306494

Fig. 79: Removing Brake Booster
Courtesy of BMW OF NORTH AMERICA, INC.

PARKING BRAKE

34 10 014 ADJUSTING HANDBRAKE

NOTE: **For Special Tool identification, see BRAKES - SPECIAL TOOLS - COOPER (1.6L) R50/W10 .**

Special Tools Required:

- 34 6 301
- 34 6 306
- 34 6 307
- 34 6 308

Perform inspection in the following manner:

When 1st ratchet is engaged, no braking force should be exerted.

The difference in wheel circumferential forces between the left and right wheels may deviate by max. 30 % from the greater value (measured on brake analyzer).

In event of larger deviations of wheel circumferential force: readjust handbrake.

Braking with locked wheels must be possible with the handbrake.

The handbrake must be readjusted if the actuation stroke is greater than 6 teeth.

NOTE: **The handbrake can only be adjusted correctly when the parking brake Bowden cables and all moving handbrake parts are free to move and fully operational. Basic handbrake adjustment is necessary:**

- **When replacing rear wheel brake pads.**
- **When replacing brake disks.**
- **In event of excessive actuation stroke (6 teeth).**
- **When replacing parking brake Bowden cables.**
- **When replacing handbrake lever.**

Setting Instruction For Parking Brake Bowden Cables

Release gaiter (1) of parking brake lever from clip.

Release self-locking nut (2) until the load on the Bowden cable has been relieved completely.

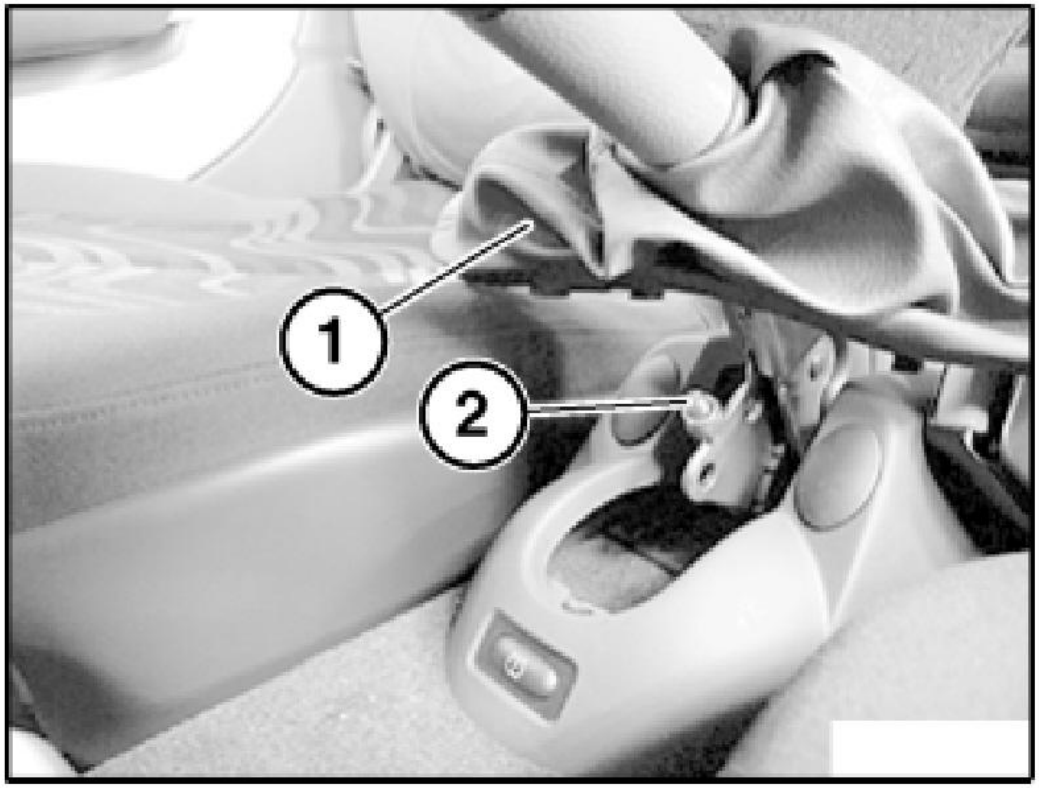

G03306495

Fig. 80: View Of Gaiter Of Parking Brake
Courtesy of BMW OF NORTH AMERICA, INC.

Remove rear brake pads. Refer to **34 21 200 REMOVING AND INSTALLING OR REPLACING BRAKE LININGS ON BOTH REAR DISK BRAKES**.

Insert brake piston into brake caliper with special tools 34 6 301, 34 6 306, 34 6 307, 34 6 308.

Install brake pads.

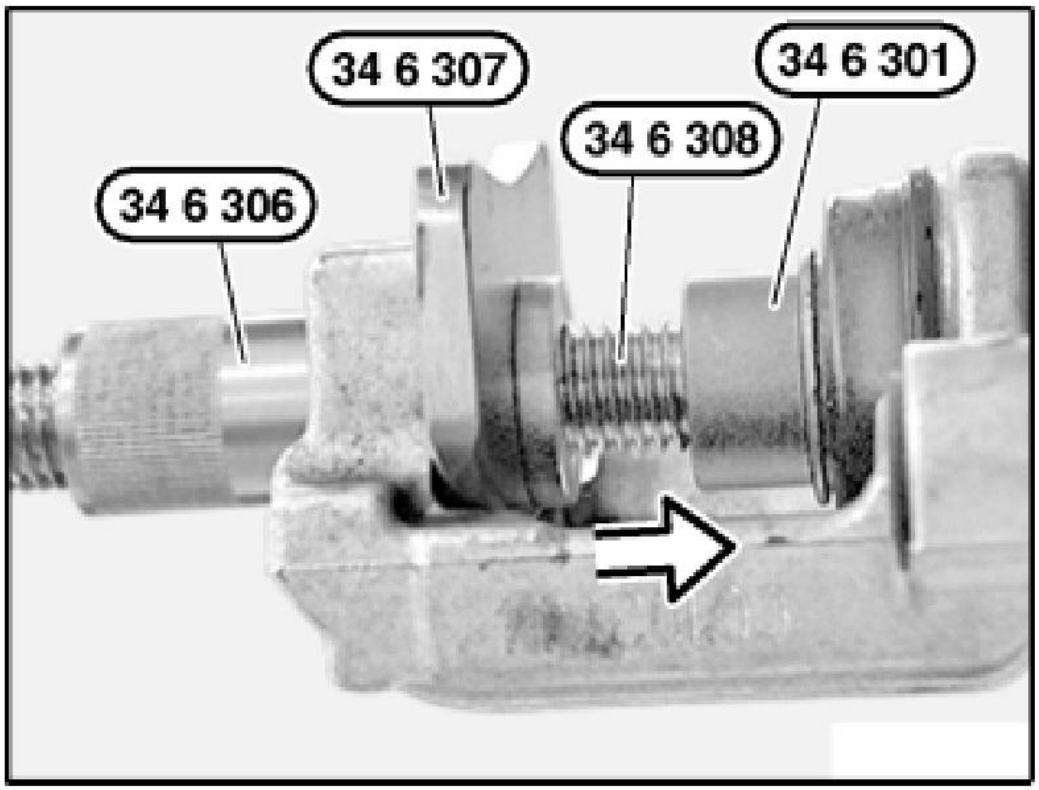

G03306496

Fig. 81: Installing Brake Piston Using Special Tools
Courtesy of BMW OF NORTH AMERICA, INC.

Screw in adjusting nut on handbrake lever until a gap (3) of 2- 3 mm between handbrake actuating lever (2) and notched pin (1) is set at brake calipers.

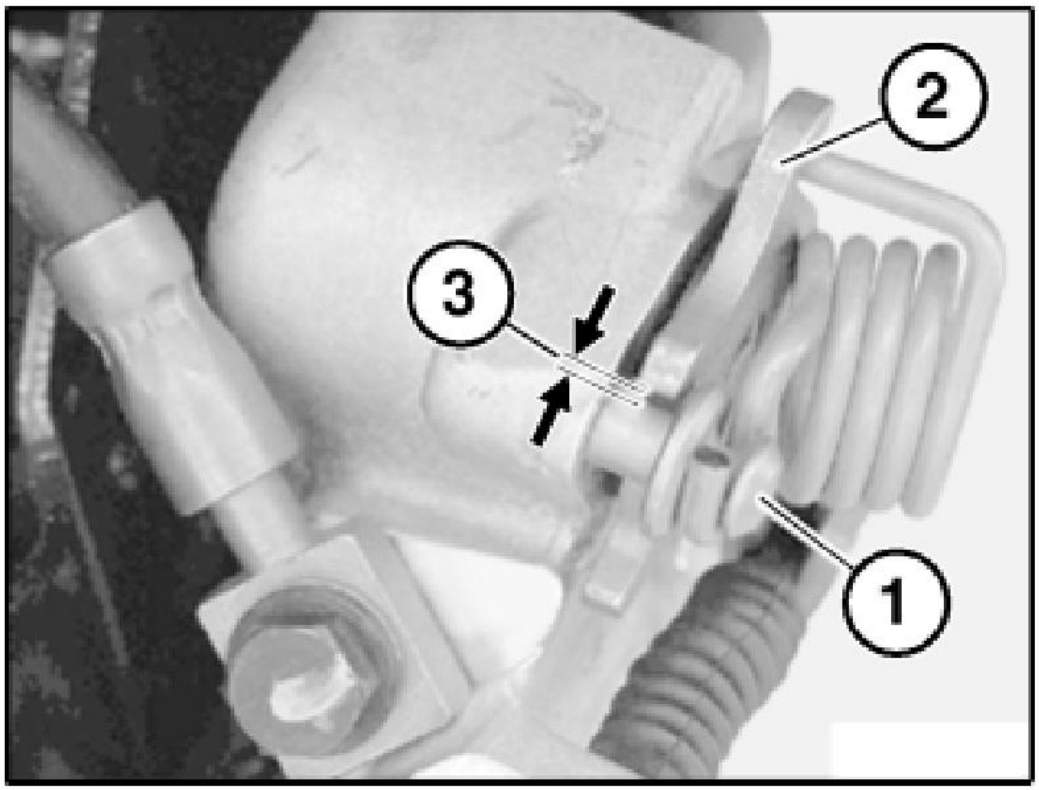

G03306497

Fig. 82: Identifying Adjusting Nut On Handbrake Lever
Courtesy of BMW OF NORTH AMERICA, INC.

IMPORTANT: Observe following sequence:

1. **Release adjusting nut on handbrake lever completely.**
2. **Remove brake pads.**
3. **Insert brake piston into brake caliper.**
4. **Install brake pads.**
5. **Adjust adjusting nut on handbrake lever as shown above.**
6. **Apply handbrake lever three times.**
7. **Press brake pedal to floor at least three times so that air gap can be set.**
8. **Carry out operational check.**

Checking Adjustment On Brake Analyzer

0th tooth (handbrake released): Vehicles with manual transmission: Shift lever in neutral position. Vehicles with automatic transmission: Selector lever in "N" position wheel circumferential force <=100 N.

1st Tooth: No increase in braking force with regard to 0th tooth. Indicator lamp can be lit.

2nd Tooth: An increase in braking force must occur, indicator lamp must be lit.

3rd Tooth: Increase In Braking Force.

4th Tooth: Wheel circumferential force per wheel: 700 N to 1300 N.

(Must be achieved in the 4th tooth at the latest).

34 41 001 REMOVING AND INSTALLING HANDBRAKE LEVER

Necessary Preliminary Tasks:

- Remove rear center console. Refer to **51 16 216 REMOVING AND INSTALLING REAR CENTER CONSOLE** .
- Remove carrier for rear center console. Refer to **51 16 218 REMOVING AND INSTALLING / REPLACING REAR STORAGE COMPARTMENT HOLDER** .

After completing tasks, adjust handbrake. Refer to **34 10 014 ADJUSTING HANDBRAKE**.

Release adjustment unit (1) for handbrake lever.

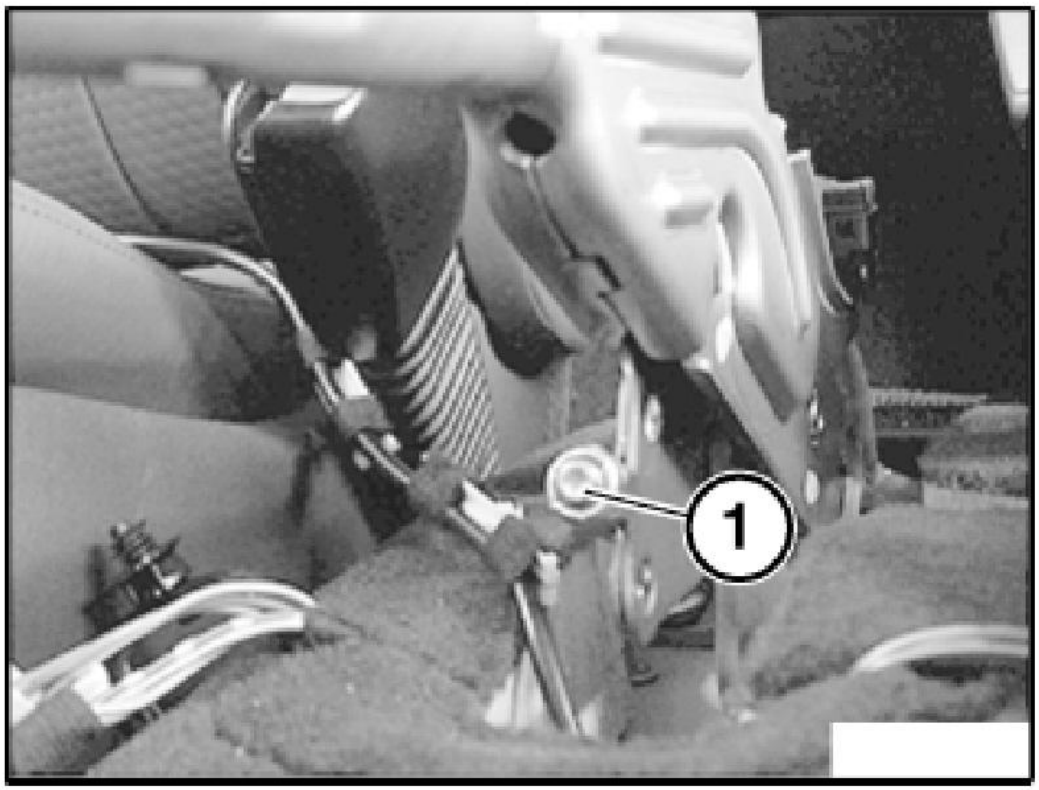

G03306498

Fig. 83: View Of Adjustment Unit For Handbrake Lever
Courtesy of BMW OF NORTH AMERICA, INC.

Detach both parking brake Bowden cables from balance arm.

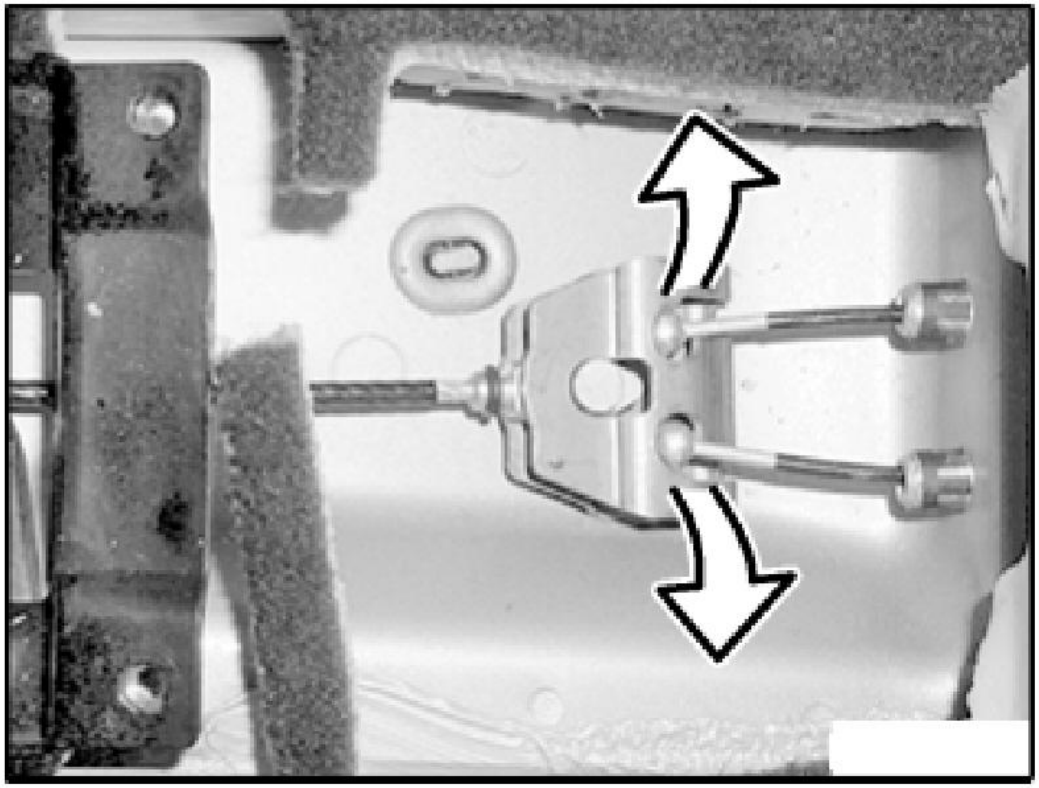

G03306499

Fig. 84: Identifying Parking Brake Bowden Cables
Courtesy of BMW OF NORTH AMERICA, INC.

Disconnect plug connection for handbrake check switch.

Release screws (1) and remove fastener (2).

Installation:

Tightening torque, (22 +/- 3 N.m.).

Remove handbrake lever.

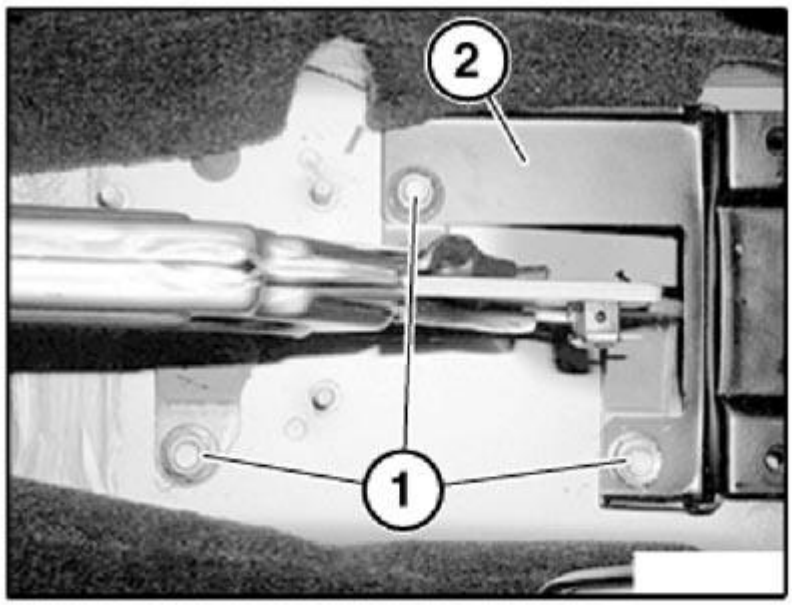

G03306500

Fig. 85: Locating Handbrake Check Switch Plug Connection
Courtesy of BMW OF NORTH AMERICA, INC.

34 41 071 REPLACING HANDLE FOR HANDBRAKE LEVER

Release retaining lugs (1) on cap (2) and remove cap. Release retaining tab (3) on handbrake lever handle and remove handbrake lever handle in direction of arrow.

Installation:

The handbrake lever handle is seated in a taper groove (4) and can only be installed in one position.

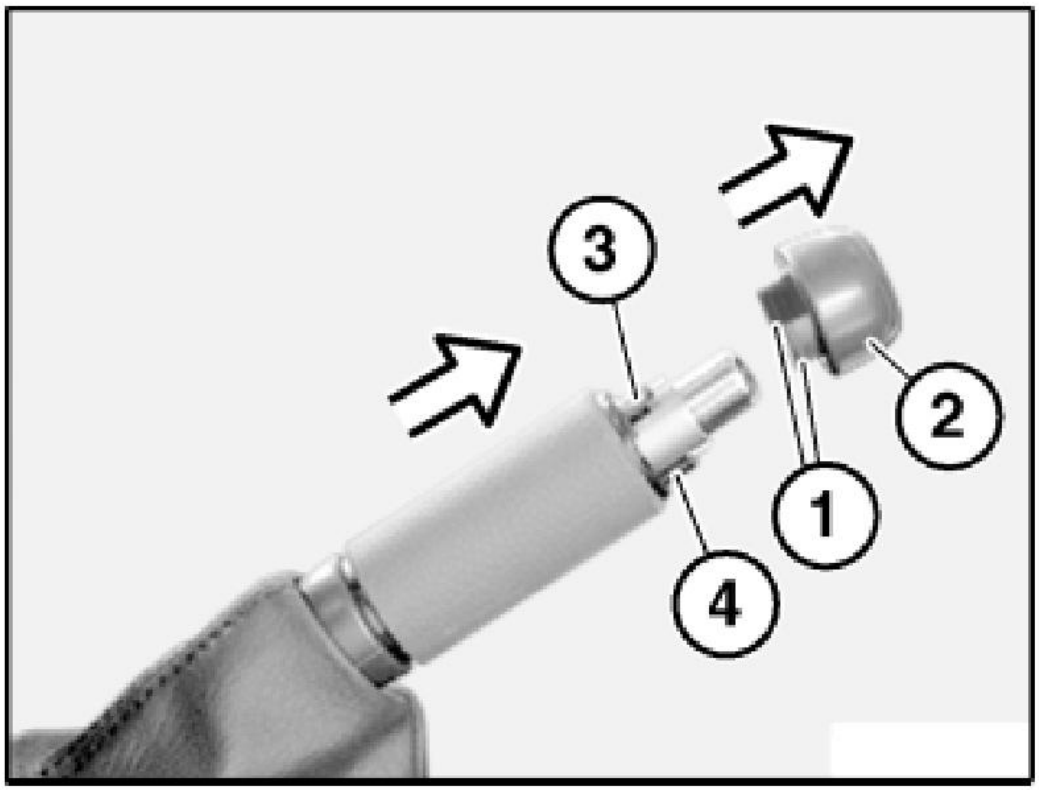

G03306501

Fig. 86: Releasing Retaining Tab On Handbrake Lever Handle
Courtesy of BMW OF NORTH AMERICA, INC.

34 41 120 REMOVING AND INSTALLING/REPLACING BOTH HANDBRAKE BOWDEN CABLES

NOTE: **For Special Tool identification, see BRAKES - SPECIAL TOOLS - COOPER (1.6L) R50/W10 .**

Special Tools Required:

- 34 6 330

Necessary Preliminary Tasks:

- Remove exhaust system. Refer to **18 12 030 REMOVING AND INSTALLING/REPLACING REAR MUFFLER (W10)** .
- Remove rear center console. Refer to **51 16 216 REMOVING AND INSTALLING REAR CENTER**

CONSOLE .

- Remove bracket on center console. Refer to **51 16 218 REMOVING AND INSTALLING / REPLACING REAR STORAGE COMPARTMENT HOLDER** .
- Remove heat shield.

After completing tasks, adjust handbrake. Refer to **34 10 014 ADJUSTING HANDBRAKE**.

Release adjusting fixture (1) for parking brake Bowden cable.

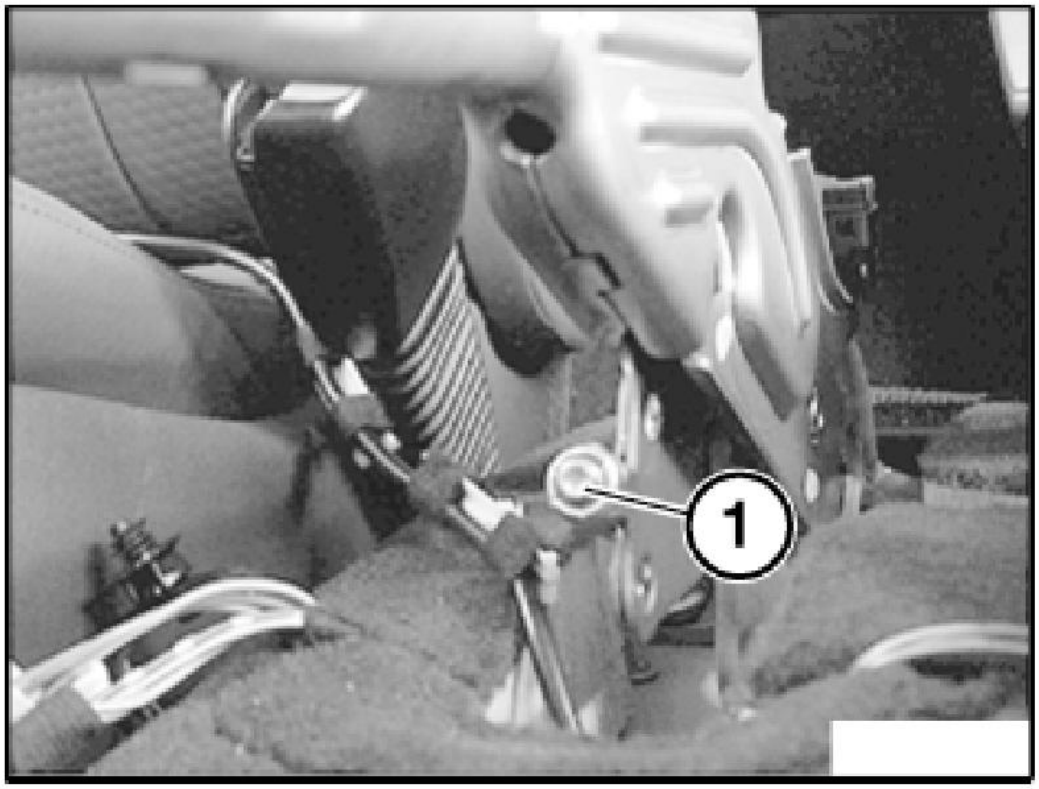

G03306502

Fig. 87: Locating Adjusting Fixture For Parking Brake Bowden Cable
Courtesy of BMW OF NORTH AMERICA, INC.

Detach both parking brake Bowden cables from balance arm.

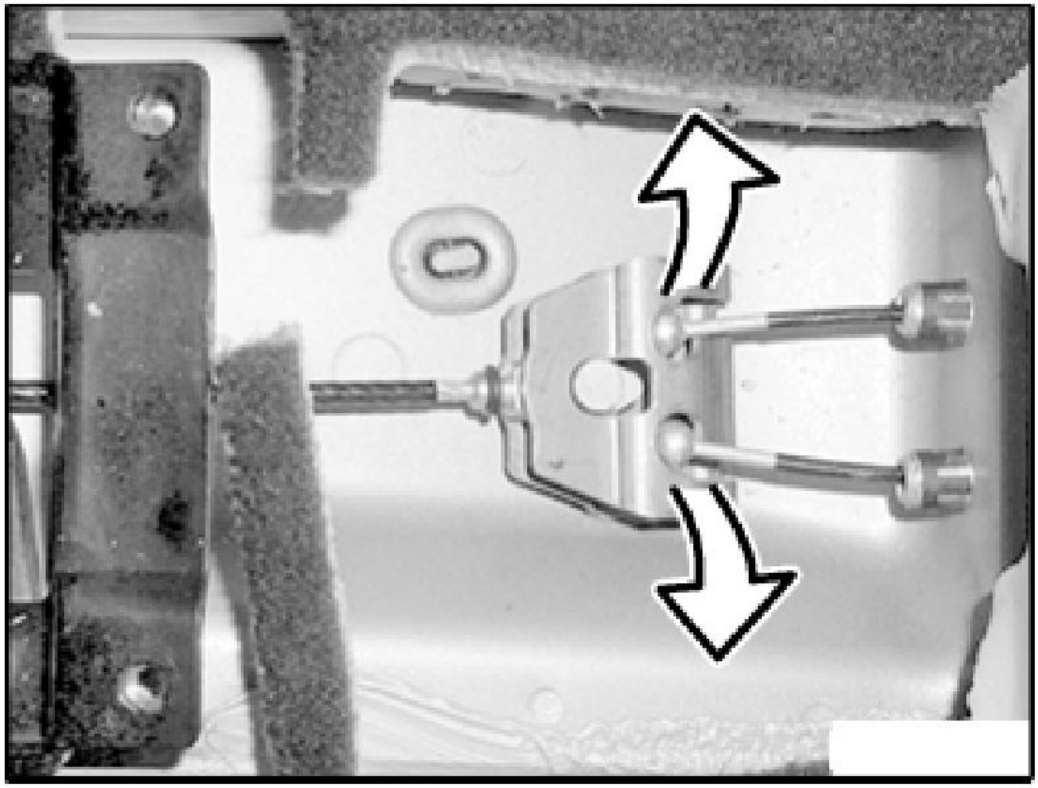

G03306503

Fig. 88: Identifying Parking Brake Bowden Cables
Courtesy of BMW OF NORTH AMERICA, INC.

Attach special tool 34 6 330 to parking brake Bowden cable (1).

Slide special tool 34 6 330 in direction of arrow onto barbs of parking brake Bowden cable (1) until barbs are free.

Push parking brake Bowden cable towards rear.

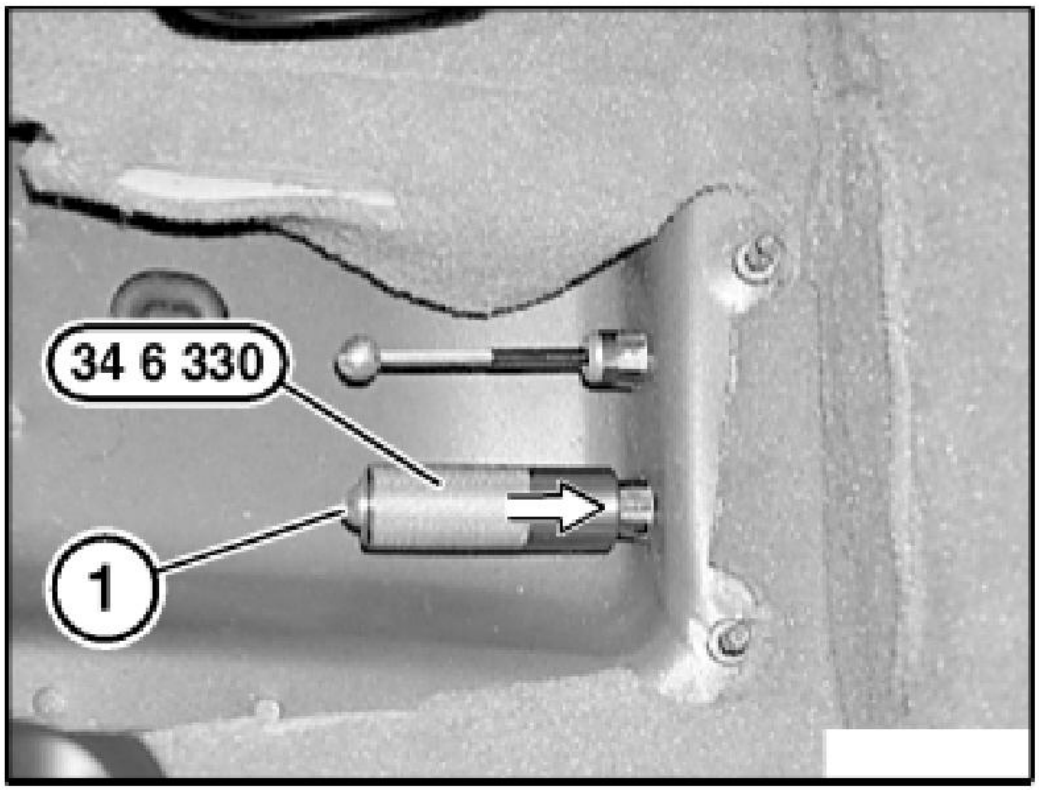

G03306504

Fig. 89: View Of Bowden Cable Removal Tool
Courtesy of BMW OF NORTH AMERICA, INC.

Release cable assemblies from clips (1) on fuel tank. Release screws (2) and remove bracket from control arm at top.

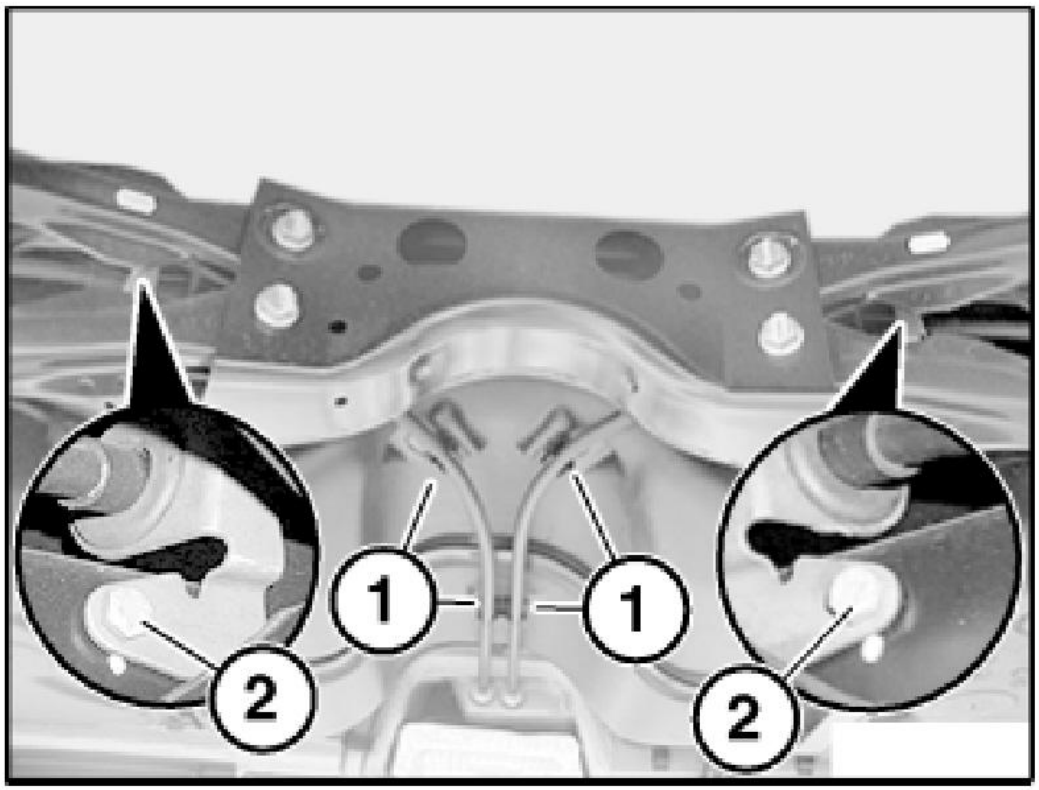

G03306505

Fig. 90: Locating Cable Assemblies
Courtesy of BMW OF NORTH AMERICA, INC.

Detach cable assembly from actuating lever on brake caliper and pull downward out of retaining fixture.

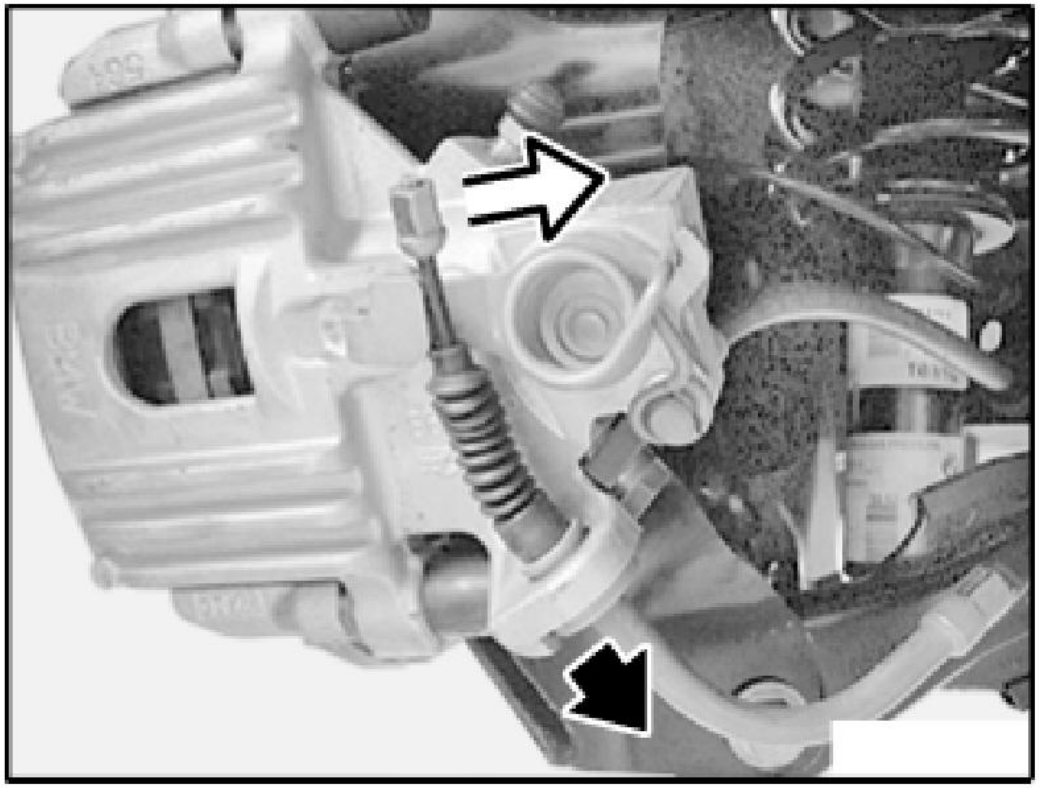

G03306506

Fig. 91: Removing Cable Assembly From Actuating Lever
Courtesy of BMW OF NORTH AMERICA, INC.

MECHANICAL - HYDRAULIC

34 51 525 REMOVING AND INSTALLING/REPLACING HYDRAULIC UNIT FOR ASC+T

Necessary Preliminary Tasks:

- Read and comply with General Information. Refer to **34 00 ... GENERAL INFORMATION**.

After completing tasks, bleed brake system. Refer to **34 00 048 BLEEDING BRAKE SYSTEM WITH ABS/ASC+T**.

IMPORTANT: Do not mix up brake lines and if necessary mark prior to removal. Seal off connection bores with plugs.

When replacing control unit:

- Carry out programming/coding. Refer to **DIAGNOSIS PROGRAMMING/CODING** .
- Adjustment of steering angle sensor.
- Mix-up check of brake lines.
- Function check, hydraulic unit.

Fit pedal prop and press brake pedal slightly. This prevents brake fluid from escaping from the expansion tank and air from entering the system after the brake lines have been disconnected.

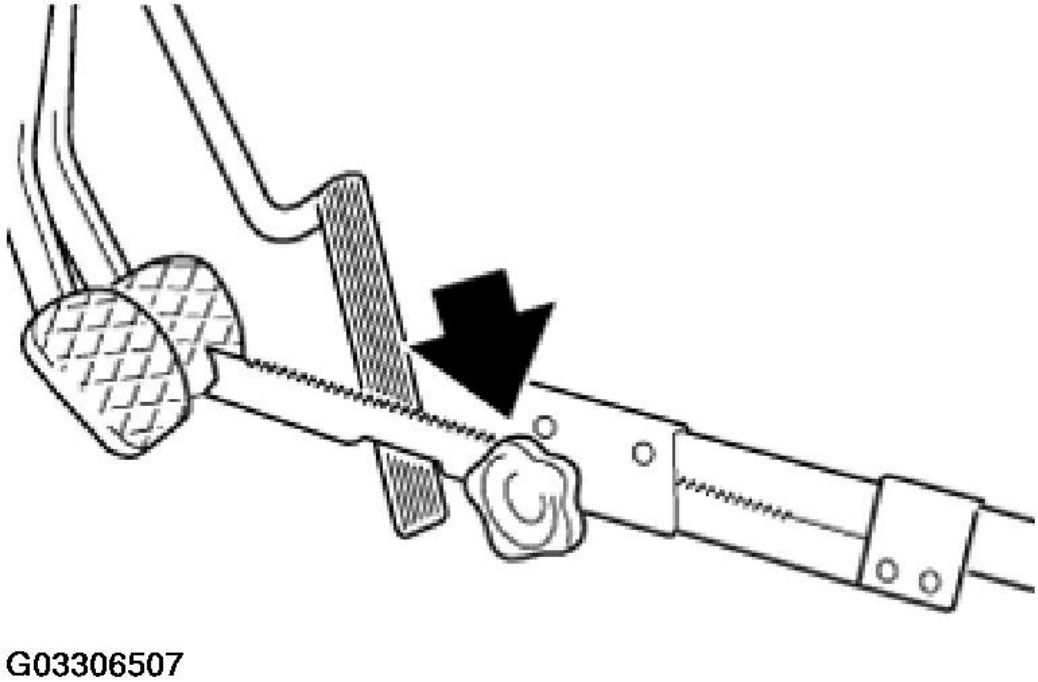

Fig. 92: Securing Brake Pedal Using Pedal Prop
Courtesy of BMW OF NORTH AMERICA, INC.

Slacken nut (1).

Installation:

Tightening torque, refer to 17 00 2AZ in **COOLING SYSTEM - TIGHTENING TORQUES - COOPER (1.6L) R50/W10** .

Release nuts (2).

Installation:

Tightening torque, (8 N.m.).

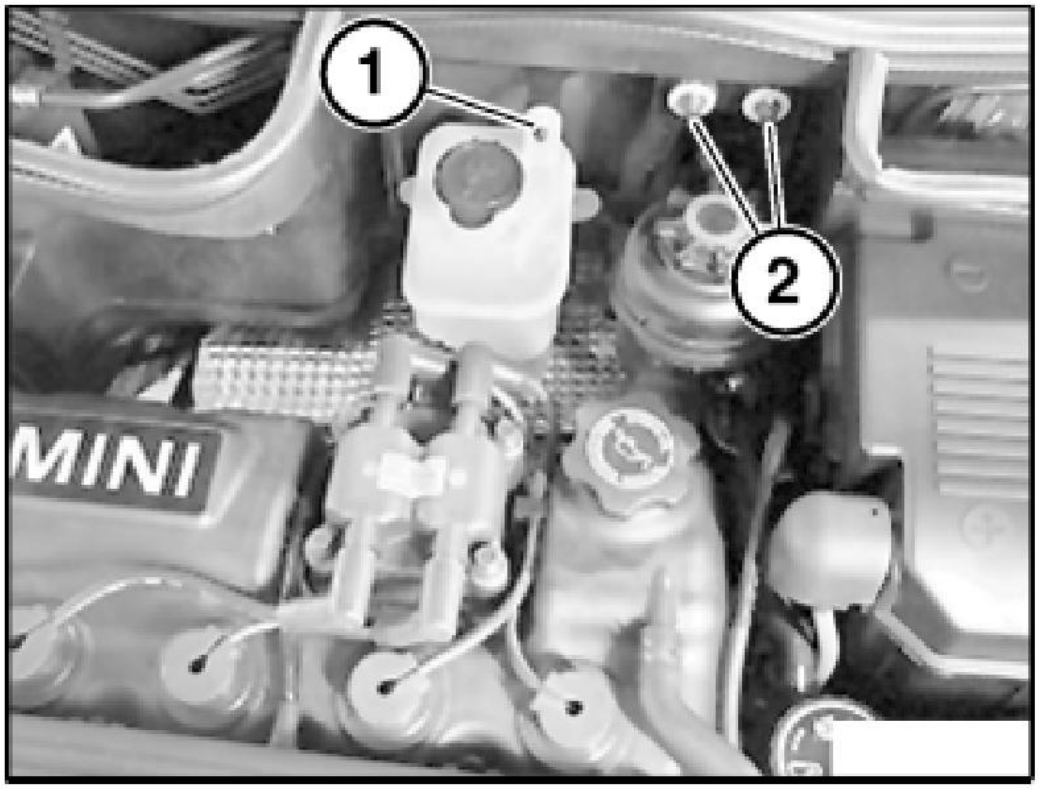

G03306508

Fig. 93: Locating Retaining Nuts
Courtesy of BMW OF NORTH AMERICA, INC.

Unfasten screws (1).

Installation:

Tightening torque, (19 N.m.).

Release nuts (2) and remove bracket from bulkhead.

Installation:

Tightening torque, 51 48 3AZ in **BODY EQUIPMENT - TIGHTENING TORQUES - COOPER (1.6L)**

R50/W10 .

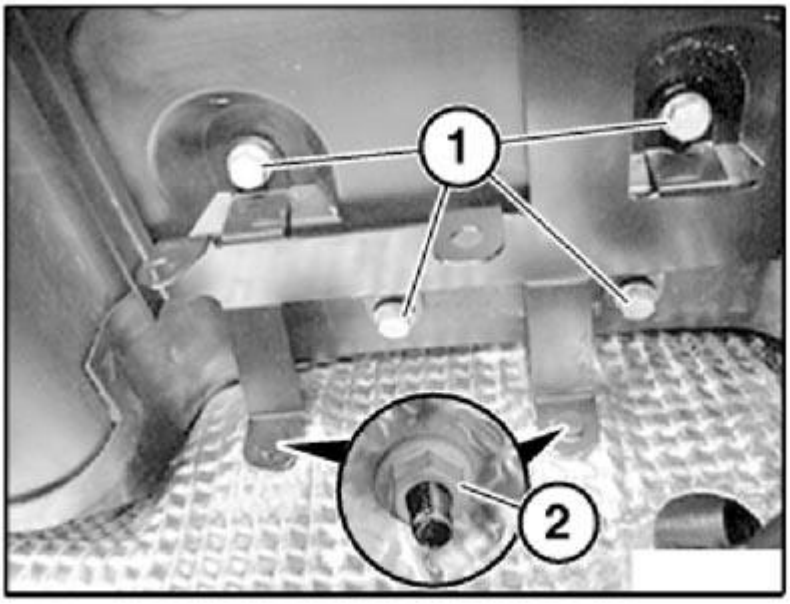

G03306509

Fig. 94: Removing Bracket From Bulkhead
Courtesy of BMW OF NORTH AMERICA, INC.

Remove seal (3) from partition wall. Release retaining clip (1).

Release fuel line from retaining clip (2) and remove partition wall.

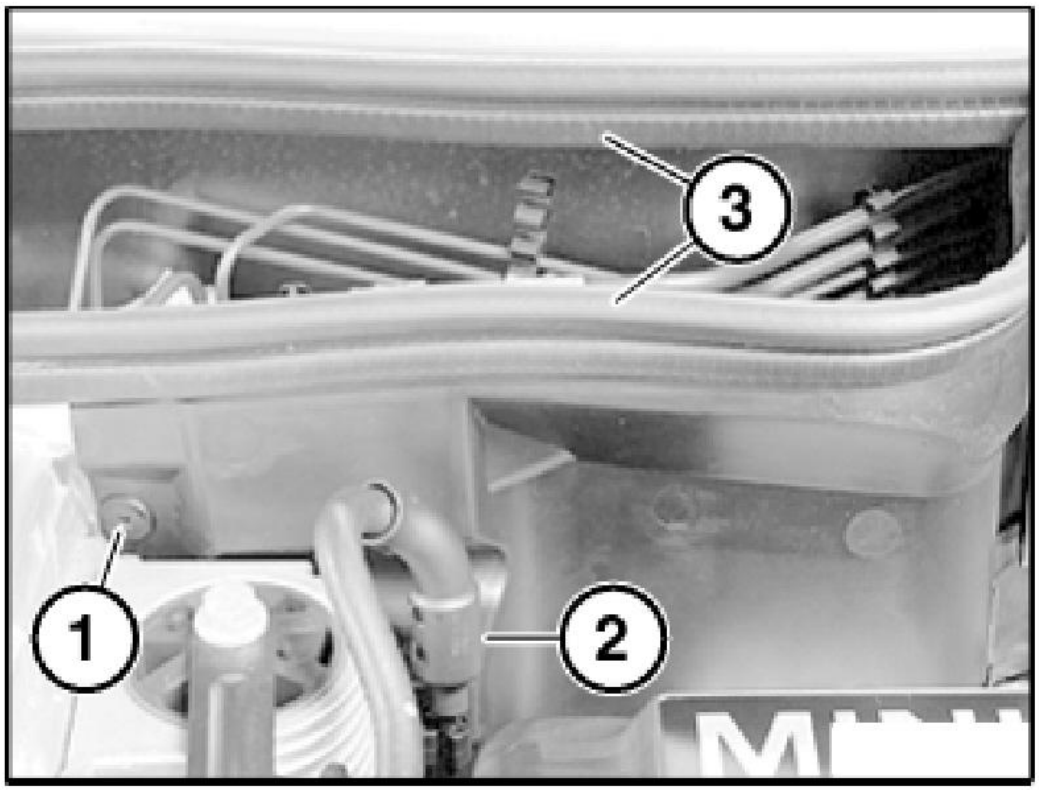

G03306510

Fig. 95: Identifying Seal On Partition Wall
Courtesy of BMW OF NORTH AMERICA, INC.

Detach all brake lines from hydraulic unit.

Installation:

Tightening torque, (14 N.m.).

Disconnect plug connection on control unit. Unscrew bolt (1).

Installation:

Tightening torque, (48 +/- 2 N.m.).

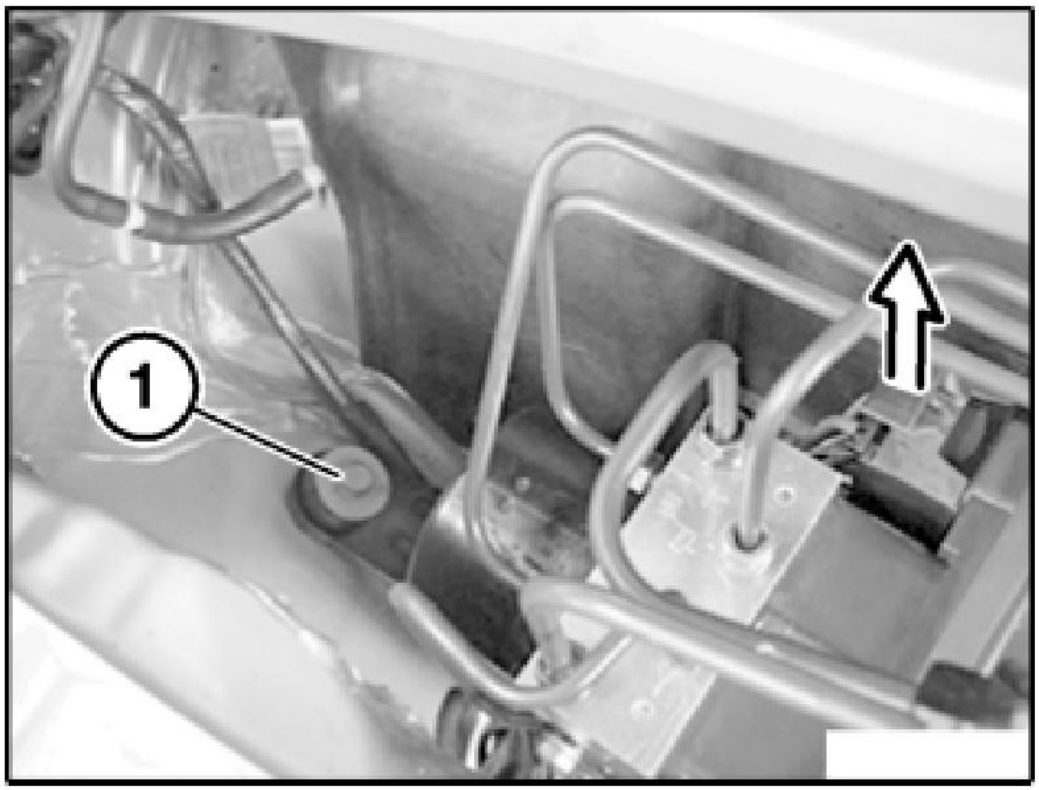

G03306511

Fig. 96: Disconnecting Plug Connection Of Control Unit
Courtesy of BMW OF NORTH AMERICA, INC.

Remove hydraulic unit.

Installation:

Make sure that hydraulic unit is correctly seated in rubber mounts.

Replace damaged rubber mounts.

The control unit must be modified when the hydraulic unit is replaced. Refer to **34 52 515 REMOVING AND INSTALLING/REPLACING CONTROL UNIT** and **34 52 516 REMOVING AND INSTALLING/REPLACING DSC CONTROL UNIT**.

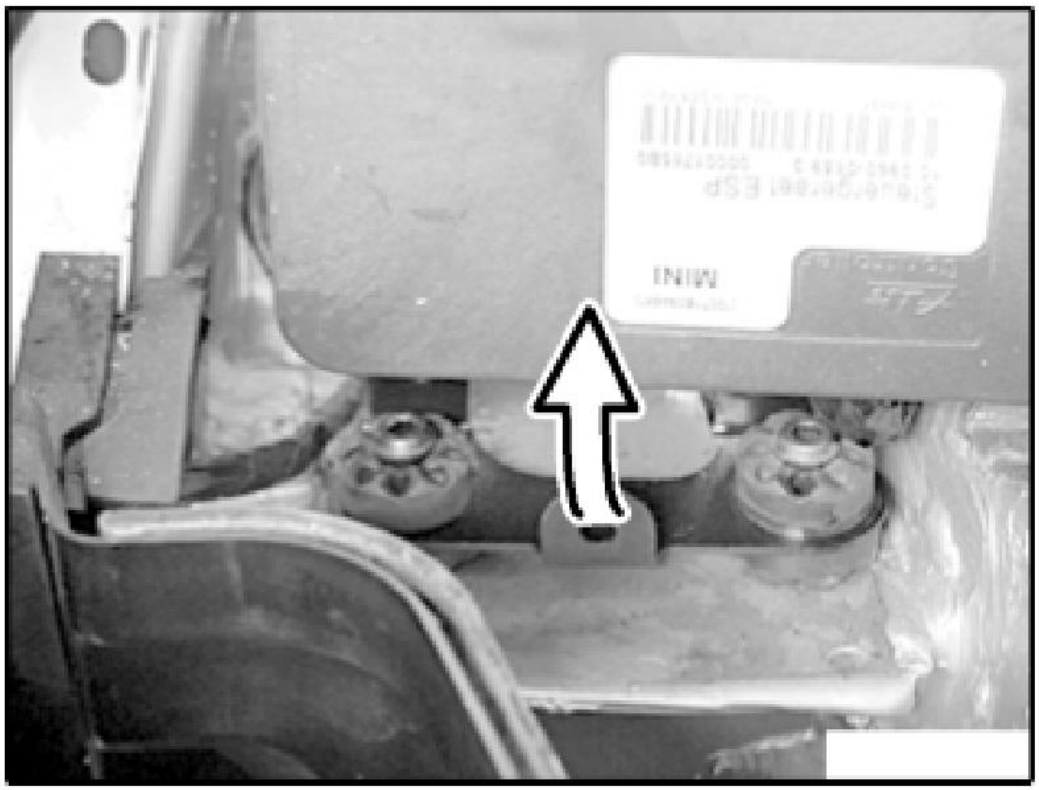

G03306512

Fig. 97: Removing Hydraulic Unit
Courtesy of BMW OF NORTH AMERICA, INC.

34 51 527 REMOVING AND INSTALLING/REPLACING HYDRAULIC UNIT FOR DSC

This procedure is described in removing and installing hydraulic unit for ASC+T. Refer to **34 51 525 REMOVING AND INSTALLING/REPLACING HYDRAULIC UNIT FOR ASC+T**.

ELECTRONIC COMPONENTS

34 52 515 REMOVING AND INSTALLING/REPLACING CONTROL UNIT

Necessary Preliminary Tasks:

- Remove hydraulic unit. Refer to **34 51 525 REMOVING AND INSTALLING/REPLACING HYDRAULIC UNIT FOR ASC+T** and **34 51 527 REMOVING AND INSTALLING/REPLACING HYDRAULIC UNIT FOR DSC**.

When replacing control unit:

- Carry out programming/coding. Refer to **DIAGNOSIS PROGRAMMING/CODING** .
- Adjustment of steering angle sensor.
- Mix-up check of brake lines.
- Function check, hydraulic unit.

To remove the hydraulic unit, close off the brake line connections with the plugs (1) contained in the control unit repair kit.

This prevents brake fluid from escaping from the hydraulic unit, which in turn facilitates the subsequent bleed of the brake system. Refer to **34 00 048 BLEEDING BRAKE SYSTEM WITH ABS/ASC+T** and **34 00 050 BLEEDING BRAKE SYSTEM WITH DSC**.

IMPORTANT: Secure pump motor with retaining tab (2) and plug (3) from control unit repair kit on valve block. Pump motor and valve block must not be separated!

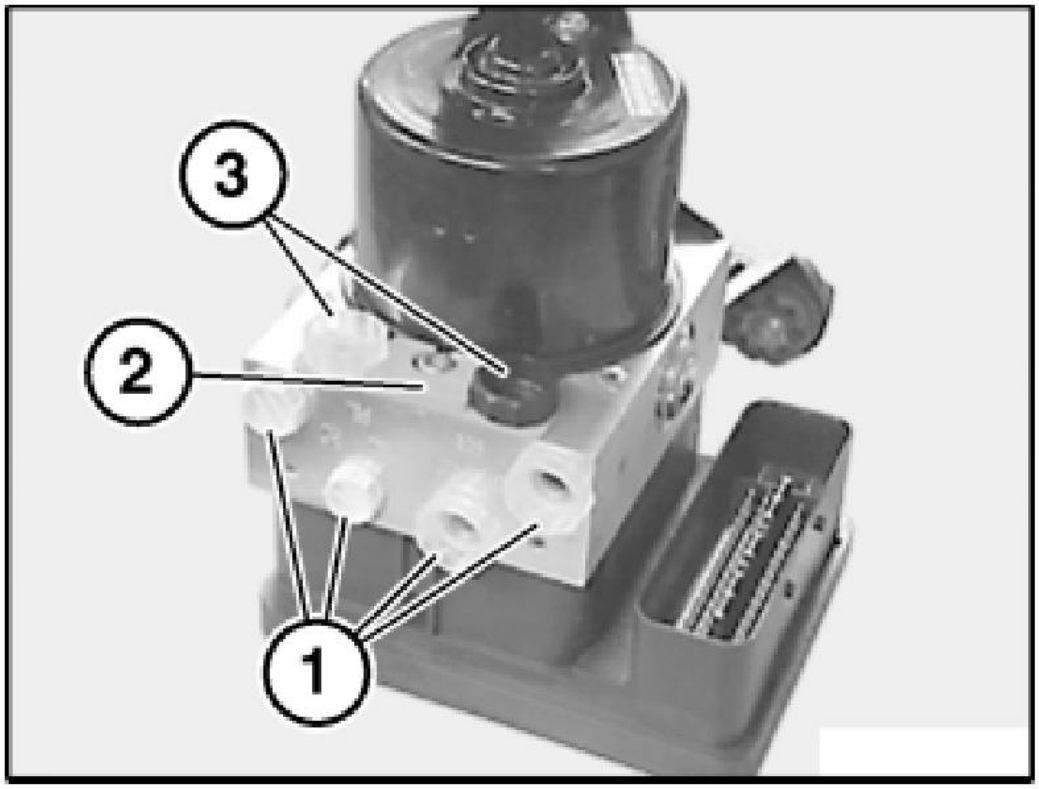

G03306513

Fig. 98: Identifying Brake Line Connections
Courtesy of BMW OF NORTH AMERICA, INC.

Release bolts (1) and remove bracket.

Installation:

Tightening torque, (8 N.m.).

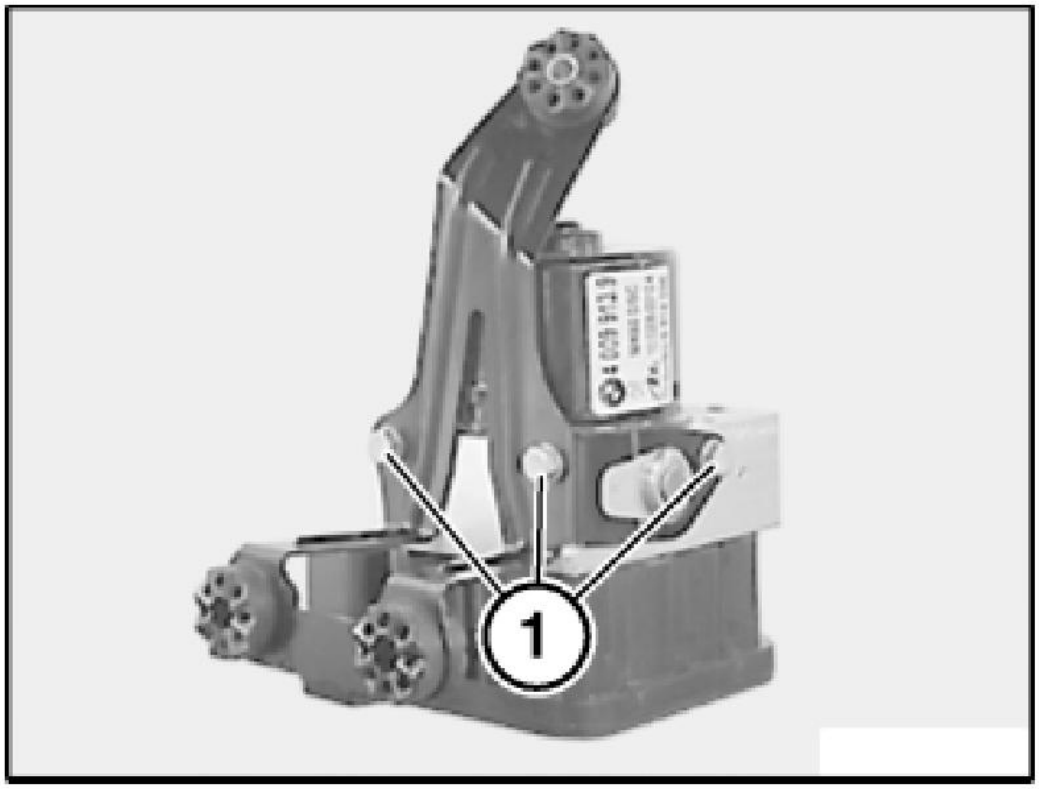

G03306514

Fig. 99: Removing Bracket
Courtesy of BMW OF NORTH AMERICA, INC.

Release screws (1) and carefully remove control unit (2) from hydraulic unit.

Tightening torque, (5 N.m.).

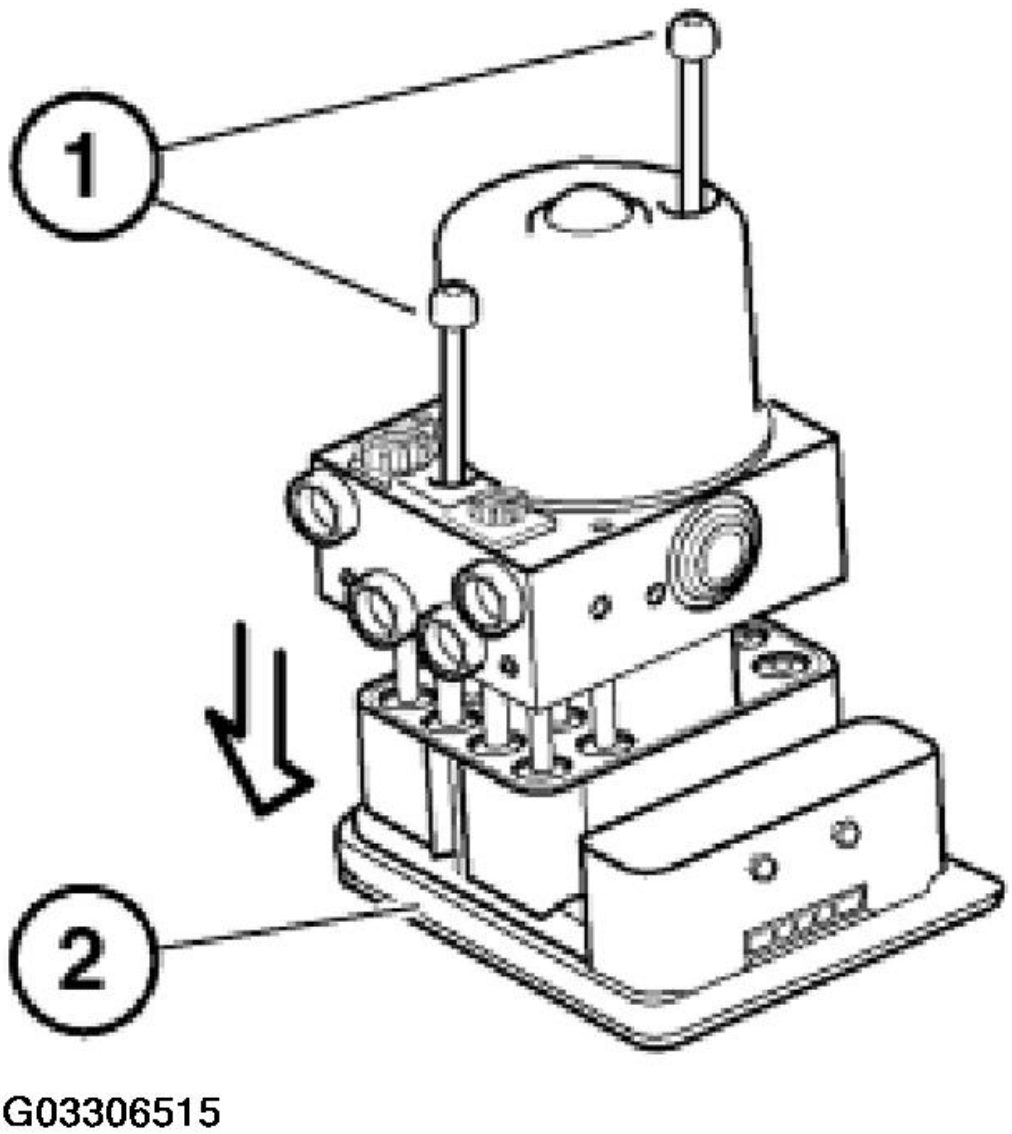

Fig. 100: Removing Control Unit From Hydraulic Unit
Courtesy of BMW OF NORTH AMERICA, INC.

Installation:

Make sure that plug-in contact (1) is correctly inserted in bore hole (2).

Make sure plug-in contact (1) is engaged correctly in the control unit before assembling the control unit and hydraulic unit.

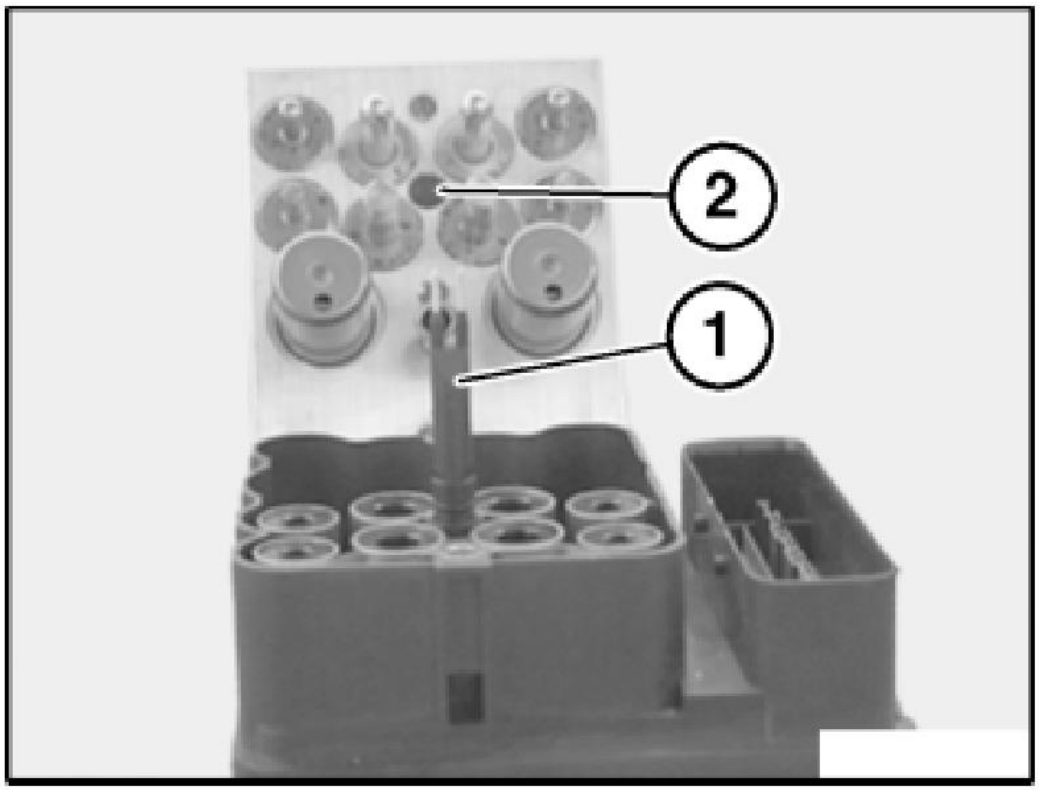

G03306516

Fig. 101: Inserting Plug-In Contact Into Bore Hole
Courtesy of BMW OF NORTH AMERICA, INC.

34 52 516 REMOVING AND INSTALLING/REPLACING DSC CONTROL UNIT

This procedure is described in removing and installing control unit. Refer to **34 52 515 REMOVING AND INSTALLING/REPLACING CONTROL UNIT**.

34 52 525 REPLACING ONE FRONT PULSE GENERATOR

Necessary Preliminary Tasks:

- Remove wheel. Refer to **36 10 300 REMOVING OR INSTALLING FRONT OR REAR WHEEL** .

Release screw (1) and remove wheel speed sensor from housing.

Installation:

Tightening torque, (8 N.m.).

Detach cable from retaining clip on McPherson strut (2).

Detach cable from retaining clip on chassis subframe (3).

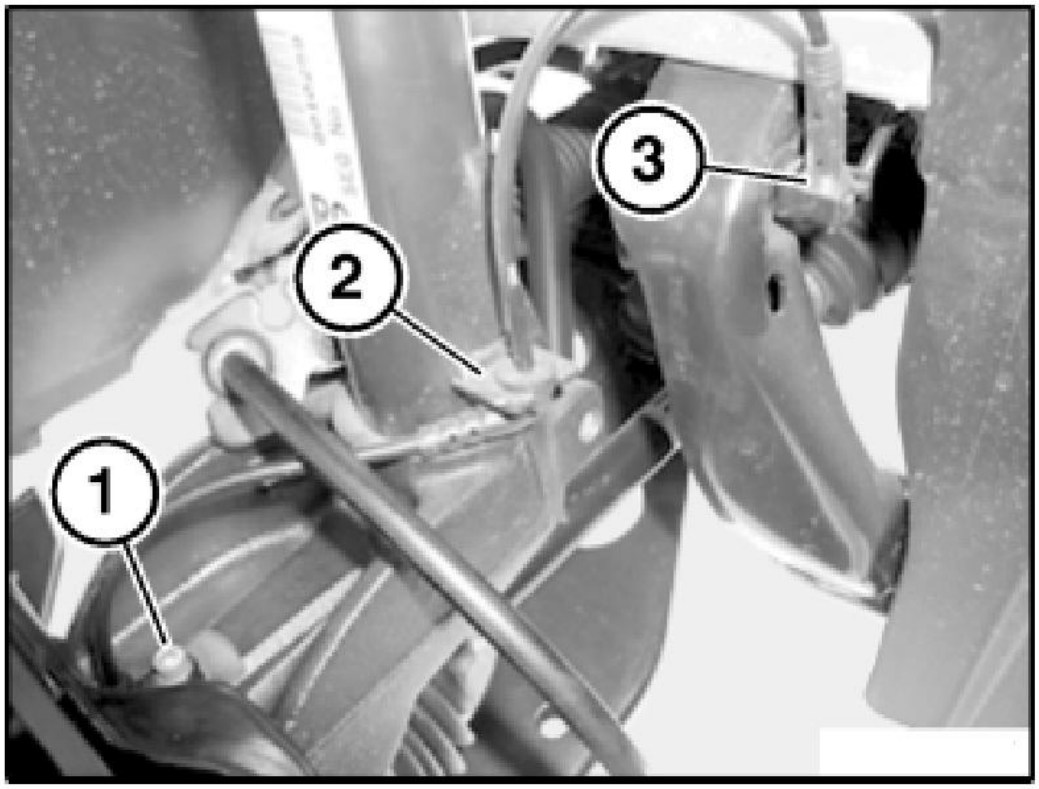

G03306517

Fig. 102: View Of Cable In Retaining Clip
Courtesy of BMW OF NORTH AMERICA, INC.

Release cable from retaining clip (1).

Unfasten plug connection (2).

Installation:

Make sure that the plug connection is correctly engaged and the rubber grommet correctly sealed.

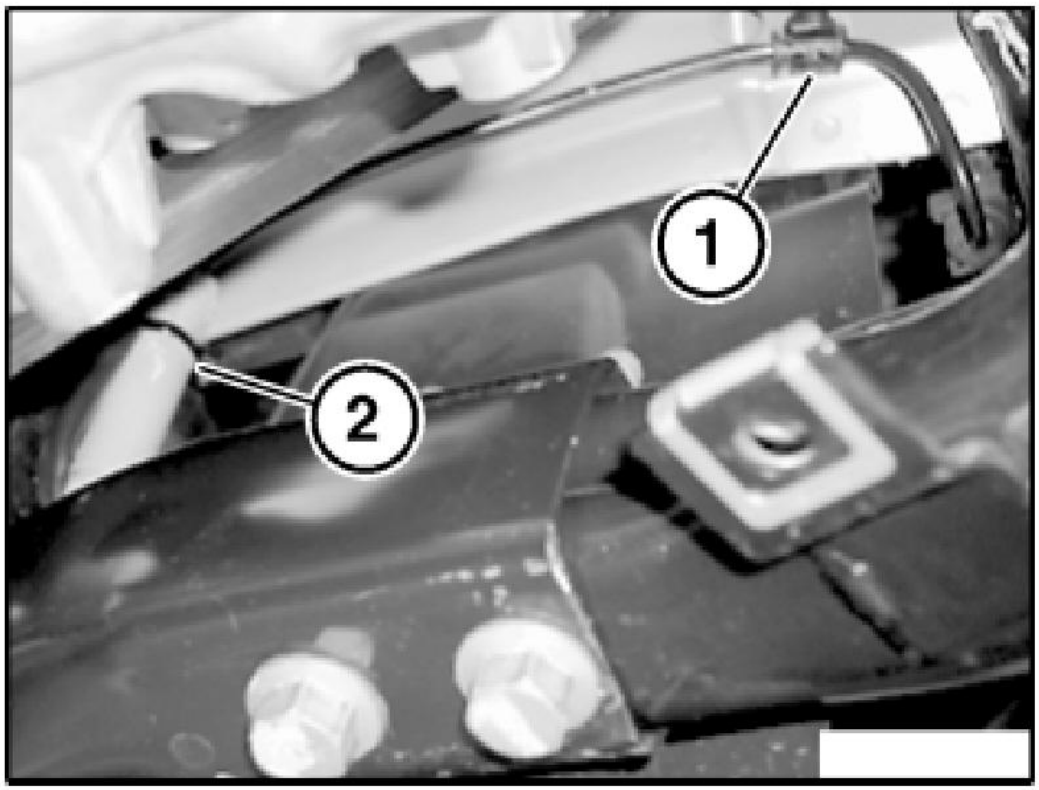

G03306518

Fig. 103: Releasing Cable From Retaining Clip
Courtesy of BMW OF NORTH AMERICA, INC.

Installation:

Clean bore hole for pulse generator and grease with Staburags NBU 12/K lubricating grease.

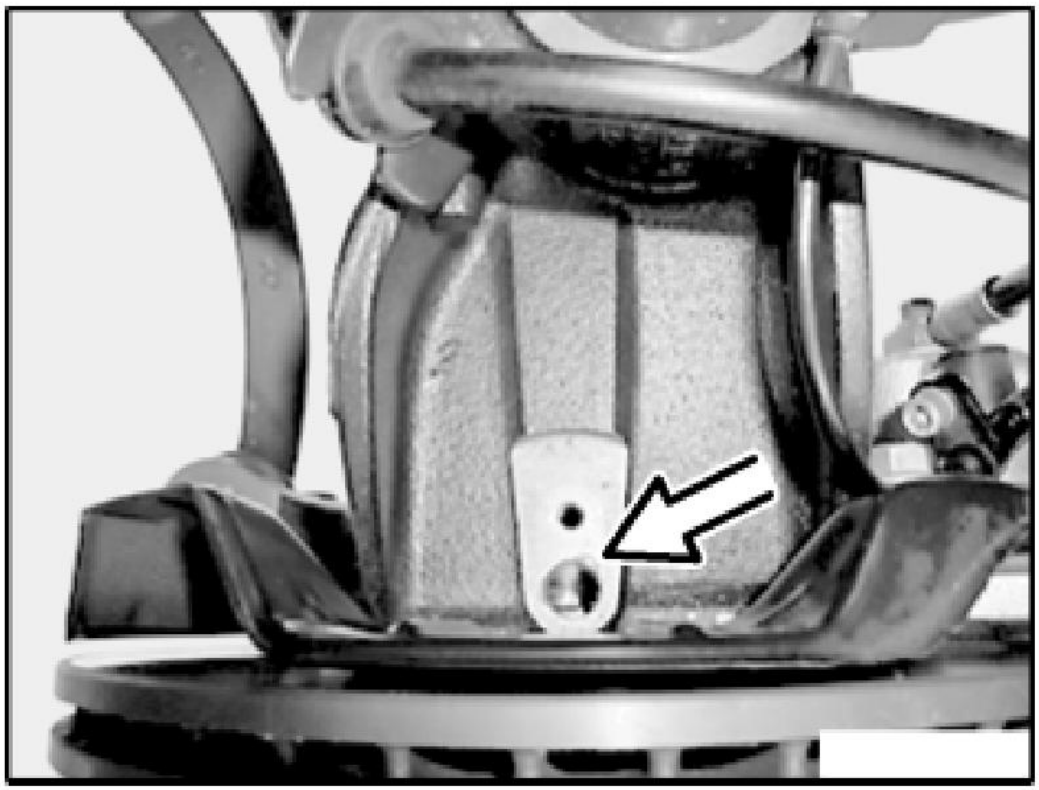

G03306519

Fig. 104: Identifying Bore Hole Of Pulse Generator
Courtesy of BMW OF NORTH AMERICA, INC.

34 52 535 REPLACING A REAR PULSE GENERATOR

Disconnect plug connection (1).

Release cable from retaining clip (2).

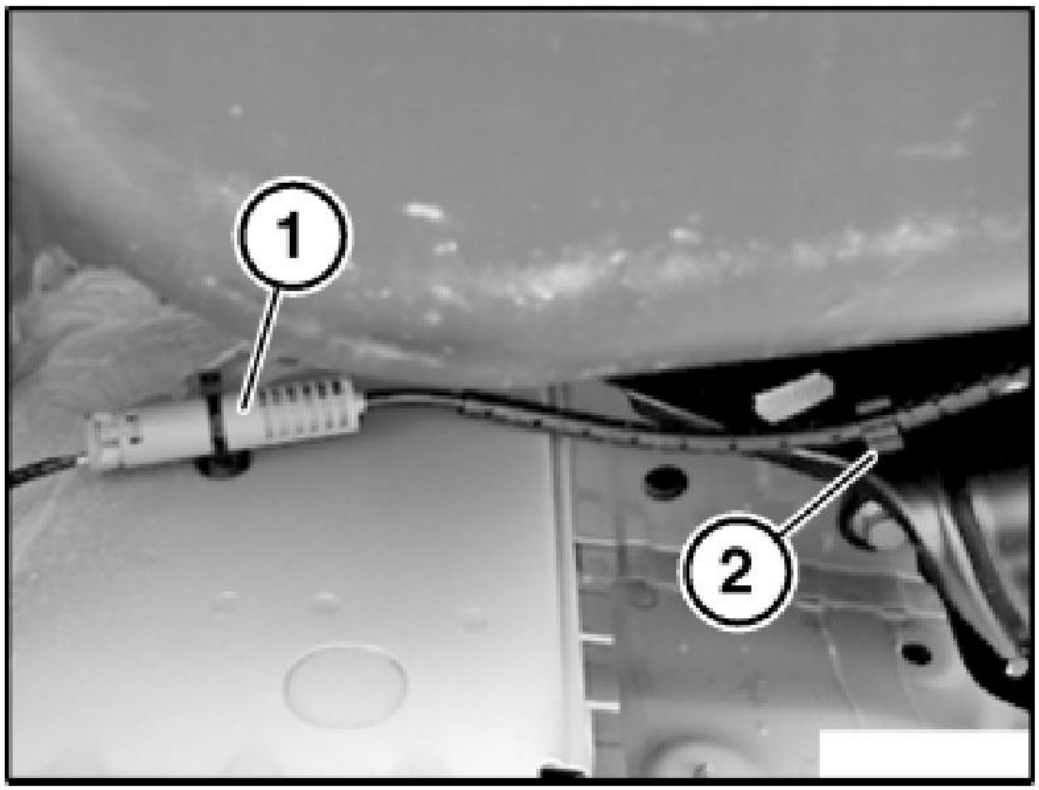

G03306520

Fig. 105: Identifying Pulse Generator Plug Connection
Courtesy of BMW OF NORTH AMERICA, INC.

Release cable from retaining clip on rear axle carrier (1).

Release cable from retaining fixture on shock absorber (2).

Release screw (3) and remove wheel speed sensor from trailing arm.

Installation:

Tightening torque, (8 N.m.).

Clean bore hole for pulse generator and grease with Staburags NBU 12/K lubricating grease.

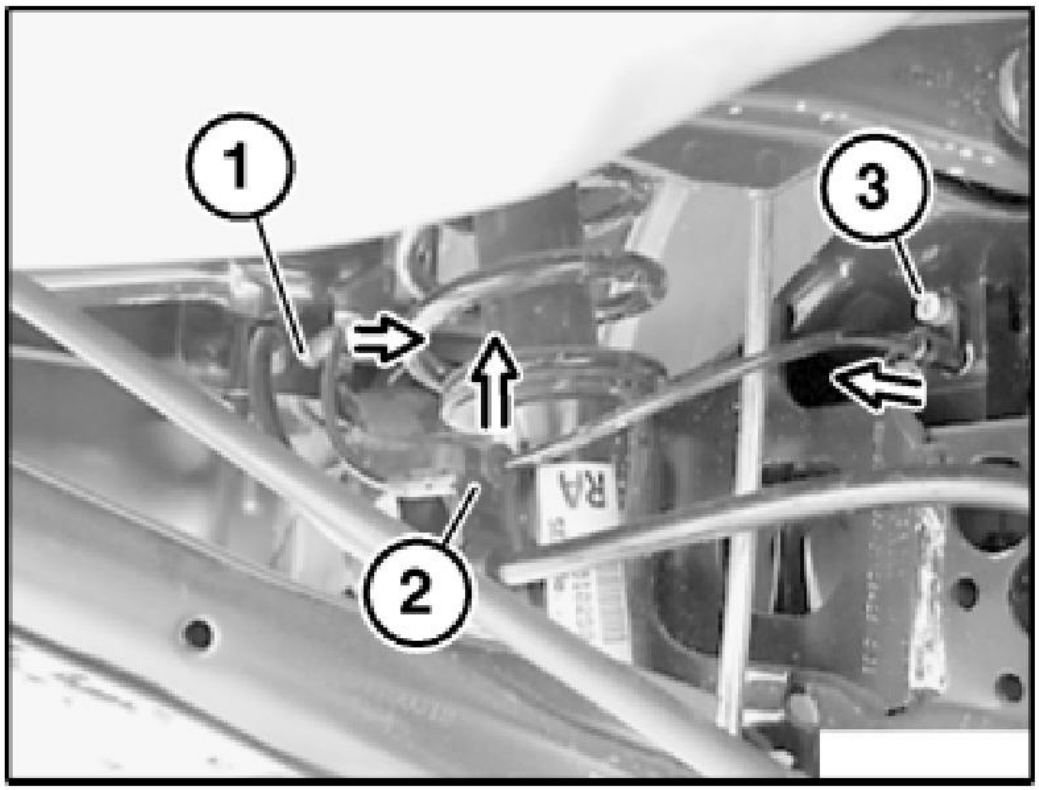

G03306521

Fig. 106: Removing Wheel Speed Sensor
Courtesy of BMW OF NORTH AMERICA, INC.

34 52 550 REMOVING AND INSTALLING/REPLACING DSC YAW SENSOR (DSC SENSOR)

Necessary Preliminary Tasks:

- Remove rear center console. Refer to **51 16 216 REMOVING AND INSTALLING REAR CENTER CONSOLE** .

NOTE: The DSC sensor contains the functions of the transversal acceleration sensor and the rotation rate sensor.

Unlock and disconnect plug (1). Release screws (2) and remove DSC sensor.

Installation:

Tightening torque. (8 N.m.).

IMPORTANT: Vibration-sensitive component.

Implement screw connection correctly, otherwise there may be malfunctions in the DSC.

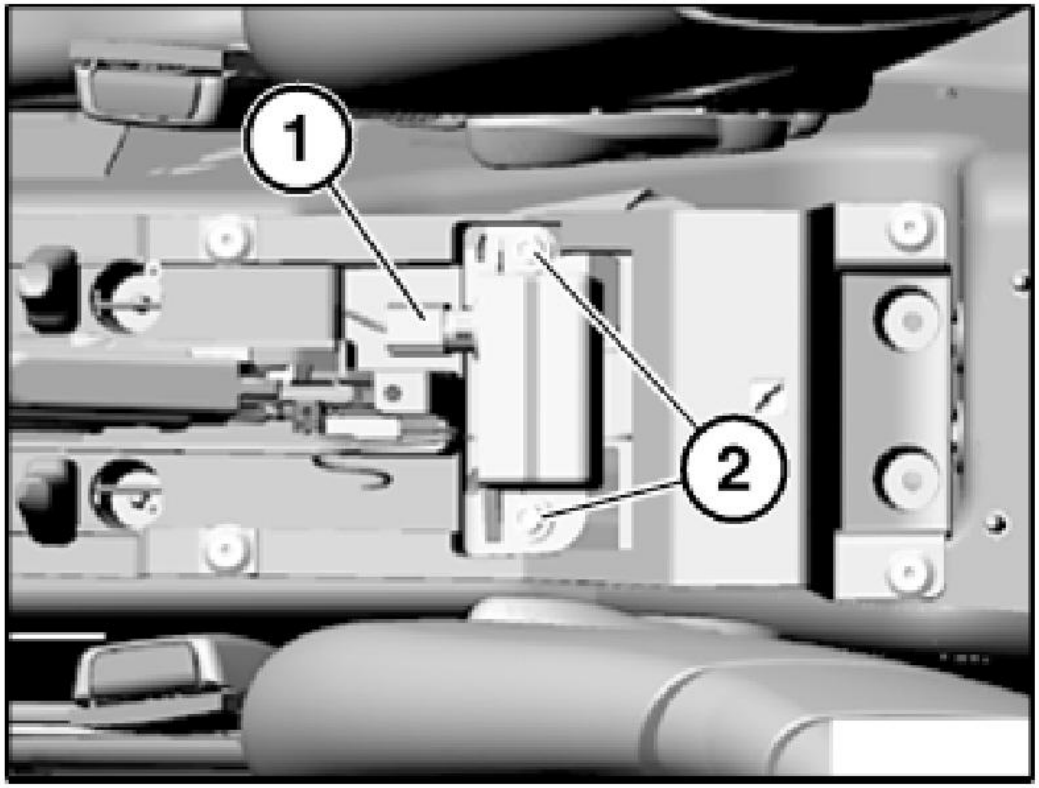

G03306522

Fig. 107: Disconnecting Plug And Removing DSC Sensor
Courtesy of BMW OF NORTH AMERICA, INC.